SCLS389J − SEPTEMBER 1997 − REVISED APRIL 2005

- **2-V to 5.5-V V_{CC} Operation**
- **Max t_{pd} of 6.5 ns at 5 V**
- **Typical V_{OLP} (Output Ground Bounce) <0.8 V at V_{CC} = 3.3 V, T_A = 25°C**
- **Typical V_{OHV} (Output V_{OH} Undershoot) >2.3 V at V_{CC} = 3.3 V, T_A = 25°C**
- **Support Mixed-Mode Voltage Operation on All Ports**
- **I_{off} Supports Partial-Power-Down Mode Operation**
- **Latch-Up Performance Exceeds 250 mA Per JESD 17**
- **ESD Protection Exceeds JESD 22**
  - **2000-V Human-Body Model (A114-A)**
  - **200-V Machine Model (A115-A)**
  - **1000-V Charged-Device Model (C101)**

SN54LV00A . . . J OR W PACKAGE
SN74LV00A . . . D, DB, DGV, NS, OR PW PACKAGE
(TOP VIEW)

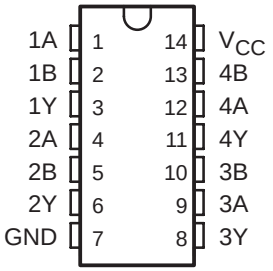

SN74LV00A . . . RGY PACKAGE
(TOP VIEW)

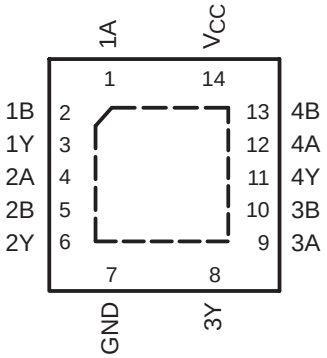

SN54LV00A . . . FK PACKAGE
(TOP VIEW)

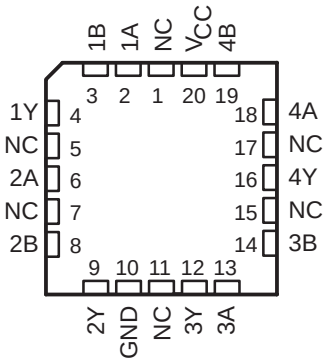

NC − No internal connection

description/ordering information

These quadruple 2-input positive-NAND gates are designed for 2-V to 5.5-V V_{CC} operation.

The ’LV00A devices perform the Boolean function $Y = \overline{A \bullet B}$ or $Y = \overline{A} + \overline{B}$ in positive logic.

ORDERING INFORMATION

T_A	PACKAGE†		ORDERABLE PART NUMBER	TOP-SIDE MARKING
−40°C to 85°C	QFN − RGY	Reel of 1000	SN74LV00ARGYR	LV00A
	SOIC − D	Tube of 50	SN74LV00AD	LV00A
		Reel of 2500	SN74LV00ADR	
	SOP − NS	Reel of 2000	SN74LV00ANSR	74LV00A
	SSOP − DB	Reel of 2000	SN74LV00ADBR	LV00A
	TSSOP − PW	Tube of 90	SN74LV00APW	LV00A
		Reel of 2000	SN74LV00APWR	
		Reel of 250	SN74LV00APWT	
	TVSOP − DGV	Reel of 2000	SN74LV00ADGVR	LV00A
−55°C to 125°C	CDIP − J	Tube of 25	SNJ54LV00AJ	SNJ54LV00AJ
	CFP − W	Tube of 150	SNJ54LV00AW	SNJ54LV00AW
	LCCC - FK	Tube of 55	SNJ54LV00AFK	SNJ54LV00AFK

† Package drawings, standard packing quantities, thermal data, symbolization, and PCB design guidelines are available at www.ti.com/sc/package.

Please be aware that an important notice concerning availability, standard warranty, and use in critical applications of Texas Instruments semiconductor products and disclaimers thereto appears at the end of this data sheet.

UNLESS OTHERWISE NOTED this document contains PRODUCTION DATA information current as of publication date. Products conform to specifications per the terms of Texas Instruments standard warranty. Production processing does not necessarily include testing of all parameters.

Copyright © 2005, Texas Instruments Incorporated

description/ordering information (continued)

These devices are fully specified for partial-power-down applications using I_{off}. The I_{off} circuitry disables the outputs, preventing damaging current backflow through the devices when they are powered down.

FUNCTION TABLE
(each gate)

INPUTS		OUTPUT
A	B	Y
H	H	L
L	X	H
X	L	H

logic diagram, each gate (positive logic)

absolute maximum ratings over operating free-air temperature range (unless otherwise noted)†

Supply voltage range, V_{CC} . . . . . −0.5 V to 7 V
Input voltage range, V_I (see Note 1) . . . . . −0.5 V to 7 V
Voltage range applied to any output in the high-impedance
or power-off state, V_O (see Note 1) . . . . . −0.5 V to 7 V
Output voltage range, V_O (see Notes 1 and 2) . . . . . −0.5 V to V_{CC} + 0.5 V
Input clamp current, I_{IK} (V_I < 0) . . . . . −20 mA
Output clamp current, I_{OK} (V_O < 0) . . . . . −50 mA
Continuous output current, I_O (V_O = 0 to V_{CC}) . . . . . ±25 mA
Continuous current through V_{CC} or GND . . . . . ±50 mA
Package thermal impedance, θ_{JA} (see Note 3): D package . . . . . 86°C/W
(see Note 3): DB package . . . . . 96°C/W
(see Note 3): DGV package . . . . . 127°C/W
(see Note 3): NS package . . . . . 76°C/W
(see Note 3): PW package . . . . . 113°C/W
(see Note 4): RGY package . . . . . 47°C/W
Storage temperature range, T_{stg} . . . . . −65°C to 150°C

† Stresses beyond those listed under “absolute maximum ratings” may cause permanent damage to the device. These are stress ratings only, and functional operation of the device at these or any other conditions beyond those indicated under “recommended operating conditions” is not implied. Exposure to absolute-maximum-rated conditions for extended periods may affect device reliability.

NOTES:
1. The input and output negative-voltage ratings may be exceeded if the input and output current ratings are observed.
2. This value is limited to 5.5 V maximum.
3. The package thermal impedance is calculated in accordance with JESD 51-7.
4. The package thermal impedance is calculated in accordance with JESD 51-5.

recommended operating conditions (see Note 5)

			SN54LV00A		SN74LV00A		UNIT
			MIN	MAX	MIN	MAX	
V_{CC}	Supply voltage		2	5.5	2	5.5	V
V_{IH}	High-level input voltage	V_{CC} = 2 V	1.5		1.5		V
		V_{CC} = 2.3 V to 2.7 V	$V_{CC} \times 0.7$		$V_{CC} \times 0.7$		
		V_{CC} = 3 V to 3.6 V	$V_{CC} \times 0.7$		$V_{CC} \times 0.7$		
		V_{CC} = 4.5 V to 5.5 V	$V_{CC} \times 0.7$		$V_{CC} \times 0.7$		
V_{IL}	Low-level input voltage	V_{CC} = 2 V		0.5		0.5	V
		V_{CC} = 2.3 V to 2.7 V		$V_{CC} \times 0.3$		$V_{CC} \times 0.3$	
		V_{CC} = 3 V to 3.6 V		$V_{CC} \times 0.3$		$V_{CC} \times 0.3$	
		V_{CC} = 4.5 V to 5.5 V		$V_{CC} \times 0.3$		$V_{CC} \times 0.3$	
V_I	Input voltage		0	5.5	0	5.5	V
V_O	Output voltage		0	V_{CC}	0	V_{CC}	V
I_{OH}	High-level output current	V_{CC} = 2 V		−50		−50	µA
		V_{CC} = 2.3 V to 2.7 V		−2		−2	mA
		V_{CC} = 3 V to 3.6 V		−6		−6	
		V_{CC} = 4.5 V to 5.5 V		−12		−12	
I_{OL}	Low-level output current	V_{CC} = 2 V		50		50	µA
		V_{CC} = 2.3 V to 2.7 V		2		2	mA
		V_{CC} = 3 V to 3.6 V		6		6	
		V_{CC} = 4.5 V to 5.5 V		12		12	
$\Delta t/\Delta v$	Input transition rise or fall rate	V_{CC} = 2.3 V to 2.7 V		200		200	ns/V
		V_{CC} = 3 V to 3.6 V		100		100	
		V_{CC} = 4.5 V to 5.5 V		20		20	
T_A	Operating free-air temperature		−55	125	−40	85	°C

NOTE 5: All unused inputs of the device must be held at V_{CC} or GND to ensure proper device operation. Refer to the TI application report, *Implications of Slow or Floating CMOS Inputs*, literature number SCBA004.

electrical characteristics over recommended operating free-air temperature range (unless otherwise noted)

PARAMETER	TEST CONDITIONS	V_{CC}	SN54LV00A			SN74LV00A			UNIT
			MIN	TYP	MAX	MIN	TYP	MAX	
V_{OH}	I_{OH} = −50 µA	2 V to 5.5 V	V_{CC}−0.1			V_{CC}−0.1			V
	I_{OH} = −2 mA	2.3 V	2			2			
	I_{OH} = −6 mA	3 V	2.48			2.48			
	I_{OH} = −12 mA	4.5 V	3.8			3.8			
V_{OL}	I_{OL} = 50 µA	2 V to 5.5 V			0.1			0.1	V
	I_{OL} = 2 mA	2.3 V			0.4			0.4	
	I_{OL} = 6 mA	3 V			0.44			0.44	
	I_{OL} = 12 mA	4.5 V			0.55			0.55	
I_I	V_I = 5.5 V or GND	0 to 5.5 V			±1			±1	µA
I_{CC}	V_I = V_{CC} or GND, I_O = 0	5.5 V			20			20	µA
I_{off}	V_I or V_O = 0 to 5.5 V	0			5			5	µA
C_i	V_I = V_{CC} or GND	3.3 V		3.3			3.3		pF
		5 V		3.3			3.3		

PRODUCT PREVIEW

PRODUCT PREVIEW information concerns products in the formative or design phase of development. Characteristic data and other specifications are design goals. Texas Instruments reserves the right to change or discontinue these products without notice.

switching characteristics over recommended operating free-air temperature range, V_{CC} = 2.5 V ± 0.2 V (unless otherwise noted) (see Figure 1)

PARAMETER	FROM (INPUT)	TO (OUTPUT)	LOAD CAPACITANCE	T_A = 25°C			SN54LV00A		SN74LV00A		UNIT
				MIN	TYP	MAX	MIN	MAX	MIN	MAX	
t_{pd}	A	Y	C_L = 15 pF		7.1*	12.9*	1*	16*	1	15	ns
			C_L = 50 pF		9.6	16.6	1	21	1	20	

PRODUCT PREVIEW

* On products compliant to MIL-PRF-38535, this parameter is not production tested.

switching characteristics over recommended operating free-air temperature range, V_{CC} = 3.3 V ± 0.3 V (unless otherwise noted) (see Figure 1)

PARAMETER	FROM (INPUT)	TO (OUTPUT)	LOAD CAPACITANCE	T_A = 25°C			SN54LV00A		SN74LV00A		UNIT
				MIN	TYP	MAX	MIN	MAX	MIN	MAX	
t_{pd}	A	Y	C_L = 15 pF		5*	7.9*	1*	10.5*	1	9.5	ns
			C_L = 50 pF		6.9	11.4	1	14	1	13	

PRODUCT PREVIEW

* On products compliant to MIL-PRF-38535, this parameter is not production tested.

switching characteristics over recommended operating free-air temperature range, V_{CC} = 5 V ± 0.5 V (unless otherwise noted) (see Figure 1)

PARAMETER	FROM (INPUT)	TO (OUTPUT)	LOAD CAPACITANCE	T_A = 25°C			SN54LV00A		SN74LV00A		UNIT
				MIN	TYP	MAX	MIN	MAX	MIN	MAX	
t_{pd}	A	Y	C_L = 15 pF		3.6*	5.5*	1*	7.5*	1	6.5	ns
			C_L = 50 pF		4.9	7.5	1	9.5	1	8.5	

PRODUCT PREVIEW

* On products compliant to MIL-PRF-38535, this parameter is not production tested.

noise characteristics, V_{CC} = 3.3 V, C_L = 50 pF, T_A = 25°C (see Note 6)

PARAMETER		SN74LV00A			UNIT
		MIN	TYP	MAX	
$V_{OL(P)}$	Quiet output, maximum dynamic V_{OL}		0.2	0.8	V
$V_{OL(V)}$	Quiet output, minimum dynamic V_{OL}		−0.1	−0.8	V
$V_{OH(V)}$	Quiet output, minimum dynamic V_{OH}		3.1		V
$V_{IH(D)}$	High-level dynamic input voltage	2.31			V
$V_{IL(D)}$	Low-level dynamic input voltage			0.99	V

NOTE 6: Characteristics are for surface-mount packages only.

operating characteristics, T_A = 25°C

PARAMETER		TEST CONDITIONS		V_{CC}	TYP	UNIT
C_{pd}	Power dissipation capacitance	C_L = 50 pF,	f = 10 MHz	3.3 V	9.5	pF
				5 V	11	

PRODUCT PREVIEW information concerns products in the formative or design phase of development. Characteristic data and other specifications are design goals. Texas Instruments reserves the right to change or discontinue these products without notice.

PARAMETER MEASUREMENT INFORMATION

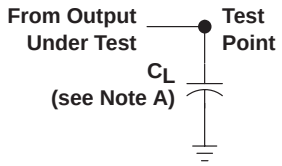

LOAD CIRCUIT FOR
TOTEM-POLE OUTPUTS

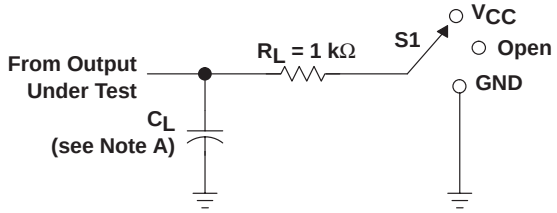

LOAD CIRCUIT FOR
3-STATE AND OPEN-DRAIN OUTPUTS

TEST	S1
t_{PLH}/t_{PHL}	Open
t_{PLZ}/t_{PZL}	V_{CC}
t_{PHZ}/t_{PZH}	GND
Open Drain	V_{CC}

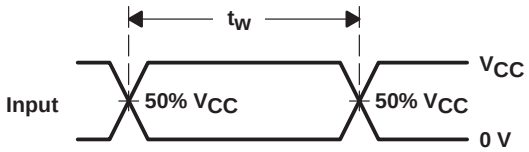

VOLTAGE WAVEFORMS
PULSE DURATION

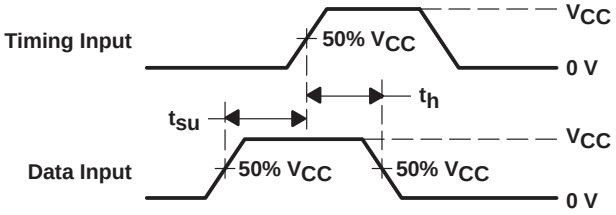

VOLTAGE WAVEFORMS
SETUP AND HOLD TIMES

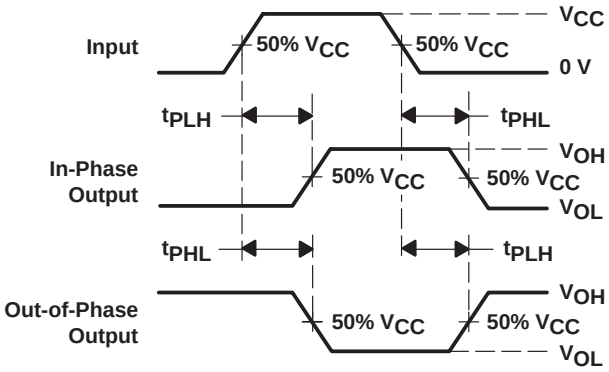

VOLTAGE WAVEFORMS
PROPAGATION DELAY TIMES
INVERTING AND NONINVERTING OUTPUTS

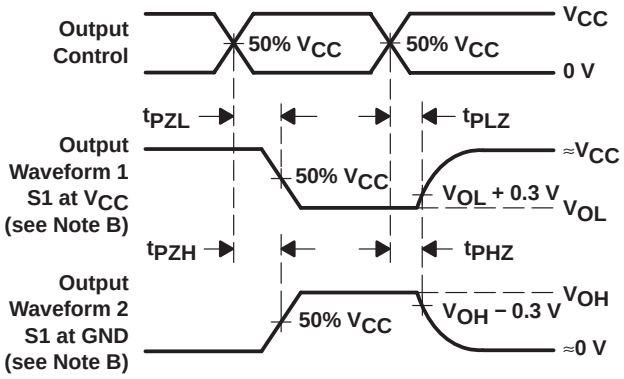

VOLTAGE WAVEFORMS
ENABLE AND DISABLE TIMES
LOW- AND HIGH-LEVEL ENABLING

NOTES:
A. C_L includes probe and jig capacitance.
B. Waveform 1 is for an output with internal conditions such that the output is low, except when disabled by the output control. Waveform 2 is for an output with internal conditions such that the output is high, except when disabled by the output control.
C. All input pulses are supplied by generators having the following characteristics: PRR ≤ 1 MHz, Z_O = 50 Ω, t_r ≤ 3 ns, t_f ≤ 3 ns.
D. The outputs are measured one at a time, with one input transition per measurement.
E. t_{PLZ} and t_{PHZ} are the same as t_{dis}.
F. t_{PZL} and t_{PZH} are the same as t_{en}.
G. t_{PHL} and t_{PLH} are the same as t_{pd} .
H. All parameters and waveforms are not applicable to all devices.

Figure 1. Load Circuit and Voltage Waveforms

PACKAGING INFORMATION

Orderable Device	Status [1]	Package Type	Package Drawing	Pins	Package Qty	Eco Plan [2]	Lead/Ball Finish	MSL Peak Temp [3]
SN74LV00AD	ACTIVE	SOIC	D	14	50	Green (RoHS & no Sb/Br)	CU NIPDAU	Level-1-260C-UNLIM
SN74LV00ADBLE	OBSOLETE	SSOP	DB	14		TBD	Call TI	Call TI
SN74LV00ADBR	ACTIVE	SSOP	DB	14	2000	Green (RoHS & no Sb/Br)	CU NIPDAU	Level-1-260C-UNLIM
SN74LV00ADBRG4	ACTIVE	SSOP	DB	14	2000	Green (RoHS & no Sb/Br)	CU NIPDAU	Level-1-260C-UNLIM
SN74LV00ADE4	ACTIVE	SOIC	D	14	50	Green (RoHS & no Sb/Br)	CU NIPDAU	Level-1-260C-UNLIM
SN74LV00ADGVR	ACTIVE	TVSOP	DGV	14	2000	Green (RoHS & no Sb/Br)	CU NIPDAU	Level-1-260C-UNLIM
SN74LV00ADGVRE4	ACTIVE	TVSOP	DGV	14	2000	Green (RoHS & no Sb/Br)	CU NIPDAU	Level-1-260C-UNLIM
SN74LV00ADR	ACTIVE	SOIC	D	14	2500	Green (RoHS & no Sb/Br)	CU NIPDAU	Level-1-260C-UNLIM
SN74LV00ADRE4	ACTIVE	SOIC	D	14	2500	Green (RoHS & no Sb/Br)	CU NIPDAU	Level-1-260C-UNLIM
SN74LV00ANSR	ACTIVE	SO	NS	14	2000	Green (RoHS & no Sb/Br)	CU NIPDAU	Level-1-260C-UNLIM
SN74LV00ANSRG4	ACTIVE	SO	NS	14	2000	Green (RoHS & no Sb/Br)	CU NIPDAU	Level-1-260C-UNLIM
SN74LV00APW	ACTIVE	TSSOP	PW	14	90	Green (RoHS & no Sb/Br)	CU NIPDAU	Level-1-260C-UNLIM
SN74LV00APWE4	ACTIVE	TSSOP	PW	14	90	Green (RoHS & no Sb/Br)	CU NIPDAU	Level-1-260C-UNLIM
SN74LV00APWG4	ACTIVE	TSSOP	PW	14	90	Green (RoHS & no Sb/Br)	CU NIPDAU	Level-1-260C-UNLIM
SN74LV00APWLE	OBSOLETE	TSSOP	PW	14		TBD	Call TI	Call TI
SN74LV00APWR	ACTIVE	TSSOP	PW	14	2000	Green (RoHS & no Sb/Br)	CU NIPDAU	Level-1-260C-UNLIM
SN74LV00APWRE4	ACTIVE	TSSOP	PW	14	2000	Green (RoHS & no Sb/Br)	CU NIPDAU	Level-1-260C-UNLIM
SN74LV00APWRG4	ACTIVE	TSSOP	PW	14	2000	Green (RoHS & no Sb/Br)	CU NIPDAU	Level-1-260C-UNLIM
SN74LV00APWT	ACTIVE	TSSOP	PW	14	250	Green (RoHS & no Sb/Br)	CU NIPDAU	Level-1-260C-UNLIM
SN74LV00APWTG4	ACTIVE	TSSOP	PW	14	250	Green (RoHS & no Sb/Br)	CU NIPDAU	Level-1-260C-UNLIM
SN74LV00ARGYR	ACTIVE	QFN	RGY	14	1000	Green (RoHS & no Sb/Br)	CU NIPDAU	Level-2-260C-1YEAR

[1] The marketing status values are defined as follows:
ACTIVE: Product device recommended for new designs.
LIFEBUY: TI has announced that the device will be discontinued, and a lifetime-buy period is in effect.
NRND: Not recommended for new designs. Device is in production to support existing customers, but TI does not recommend using this part in a new design.
PREVIEW: Device has been announced but is not in production. Samples may or may not be available.
OBSOLETE: TI has discontinued the production of the device.

[2] Eco Plan - The planned eco-friendly classification: Pb-Free (RoHS) or Green (RoHS & no Sb/Br) - please check http://www.ti.com/productcontent for the latest availability information and additional product content details.

TBD: The Pb-Free/Green conversion plan has not been defined.
Pb-Free (RoHS): TI's terms "Lead-Free" or "Pb-Free" mean semiconductor products that are compatible with the current RoHS requirements for all 6 substances, including the requirement that lead not exceed 0.1% by weight in homogeneous materials. Where designed to be soldered at high temperatures, TI Pb-Free products are suitable for use in specified lead-free processes.
Green (RoHS & no Sb/Br): TI defines "Green" to mean Pb-Free (RoHS compatible), and free of Bromine (Br) and Antimony (Sb) based flame retardants (Br or Sb do not exceed 0.1% by weight in homogeneous material)

(3) MSL, Peak Temp. -- The Moisture Sensitivity Level rating according to the JEDEC industry standard classifications, and peak solder temperature.

Important Information and Disclaimer: The information provided on this page represents TI's knowledge and belief as of the date that it is provided. TI bases its knowledge and belief on information provided by third parties, and makes no representation or warranty as to the accuracy of such information. Efforts are underway to better integrate information from third parties. TI has taken and continues to take reasonable steps to provide representative and accurate information but may not have conducted destructive testing or chemical analysis on incoming materials and chemicals. TI and TI suppliers consider certain information to be proprietary, and thus CAS numbers and other limited information may not be available for release.

In no event shall TI's liability arising out of such information exceed the total purchase price of the TI part(s) at issue in this document sold by TI to Customer on an annual basis.

DGV (R-PDSO-G)** **PLASTIC SMALL-OUTLINE**

24 PINS SHOWN

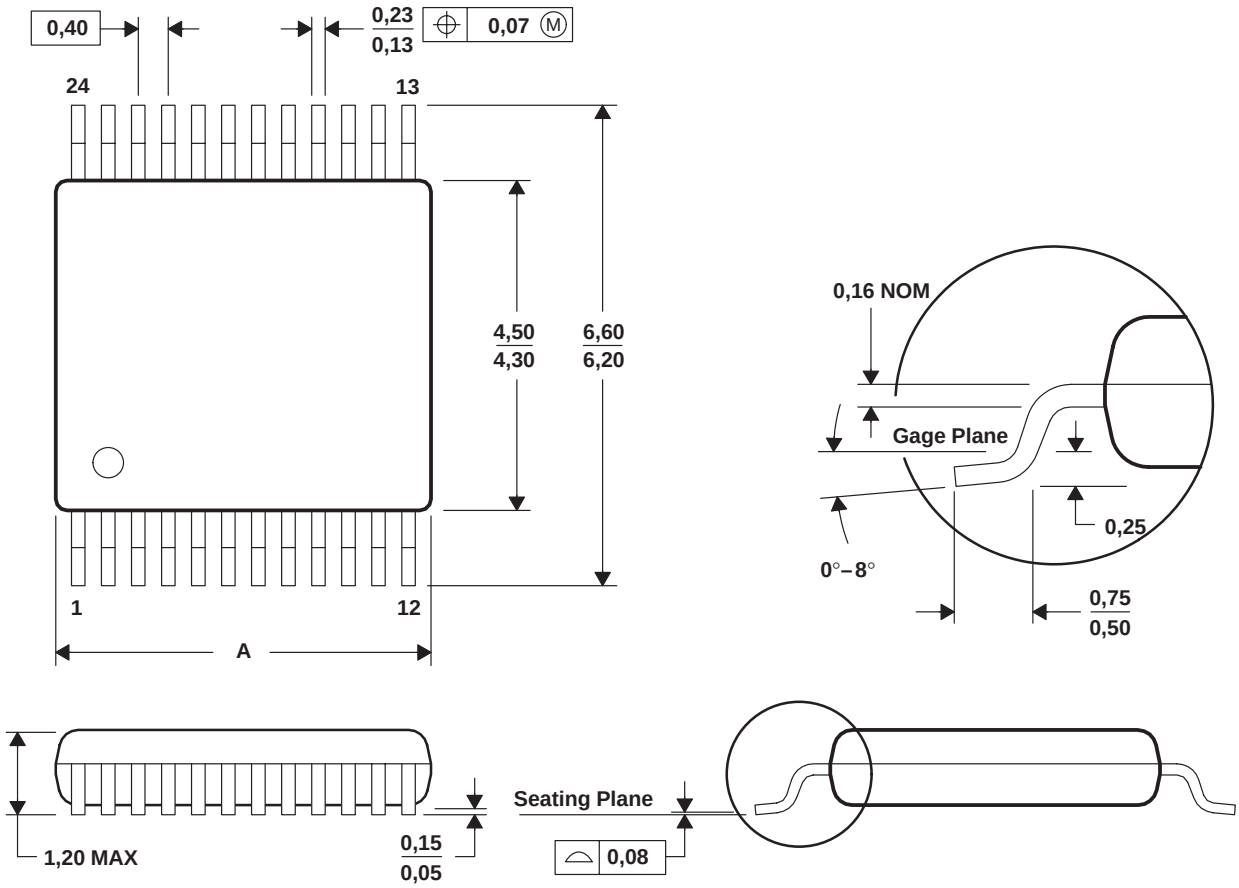

DIM \ PINS **	14	16	20	24	38	48	56
A MAX	3,70	3,70	5,10	5,10	7,90	9,80	11,40
A MIN	3,50	3,50	4,90	4,90	7,70	9,60	11,20

4073251/E 08/00

NOTES: A. All linear dimensions are in millimeters.
B. This drawing is subject to change without notice.
C. Body dimensions do not include mold flash or protrusion, not to exceed 0,15 per side.
D. Falls within JEDEC: 24/48 Pins – MO-153
14/16/20/56 Pins – MO-194

D (R–PDSO–G14) PLASTIC SMALL–OUTLINE PACKAGE

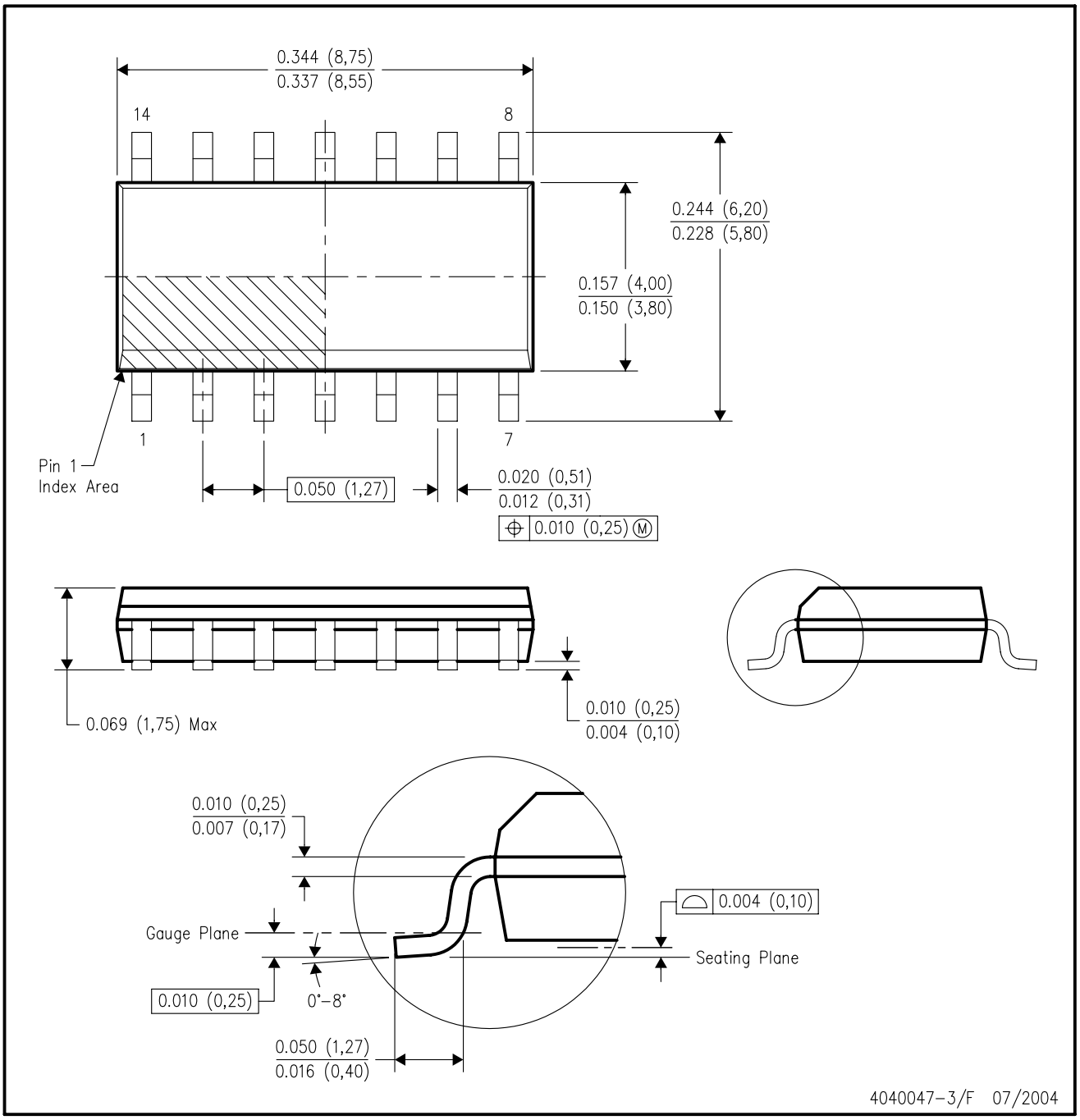

NOTES:
A. All linear dimensions are in inches (millimeters).
B. This drawing is subject to change without notice.
C. Body dimensions do not include mold flash or protrusion not to exceed 0.006 (0,15).
D. Falls within JEDEC MS–012 variation AB.

RGY (S–PQFP–N14) PLASTIC QUAD FLATPACK

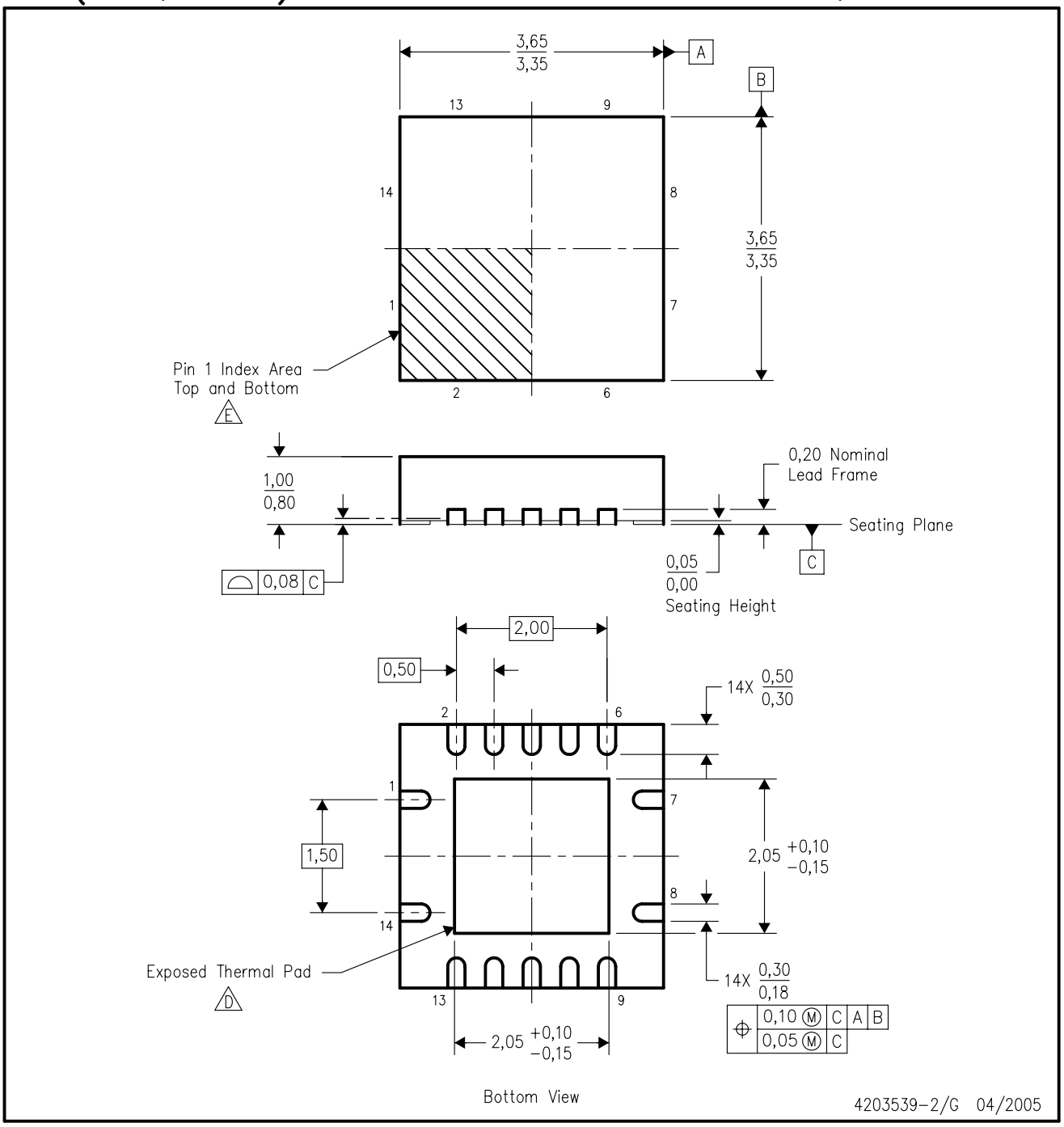

NOTES:
- A. All linear dimensions are in millimeters. Dimensioning and tolerancing per ASME Y14.5M–1994.
- B. This drawing is subject to change without notice.
- C. QFN (Quad Flatpack No–Lead) package configuration.
- D. The package thermal pad must be soldered to the board for thermal and mechanical performance.
- E. Pin 1 identifiers are located on both top and bottom of the package and within the zone indicated. The Pin 1 identifiers are either a molded, marked, or metal feature.
- F. Package complies to JEDEC MO–241 variation BA.

MECHANICAL DATA

NS (R-PDSO-G)** **PLASTIC SMALL-OUTLINE PACKAGE**

14-PINS SHOWN

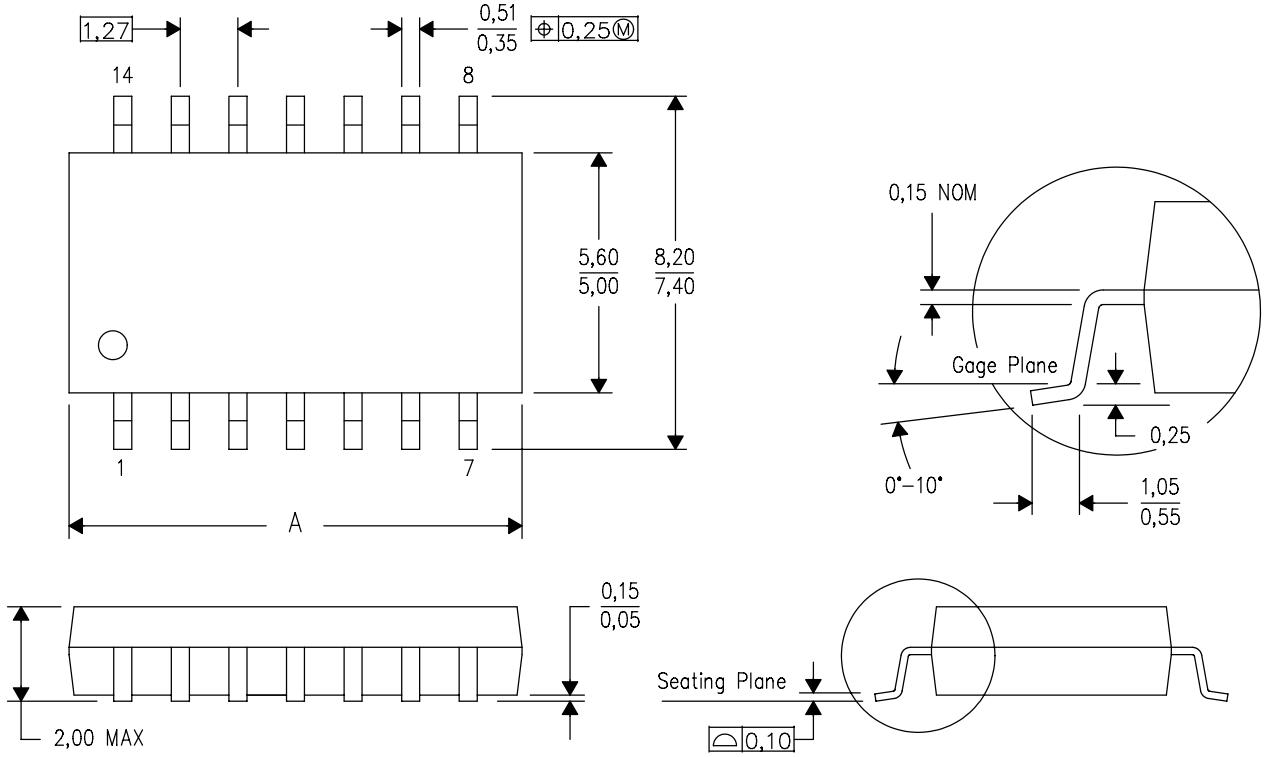

DIM \ PINS **	14	16	20	24
A MAX	10,50	10,50	12,90	15,30
A MIN	9,90	9,90	12,30	14,70

4040062/C 03/03

NOTES:
A. All linear dimensions are in millimeters.
B. This drawing is subject to change without notice.
C. Body dimensions do not include mold flash or protrusion, not to exceed 0,15.

DB (R-PDSO-G)** **PLASTIC SMALL-OUTLINE**

28 PINS SHOWN

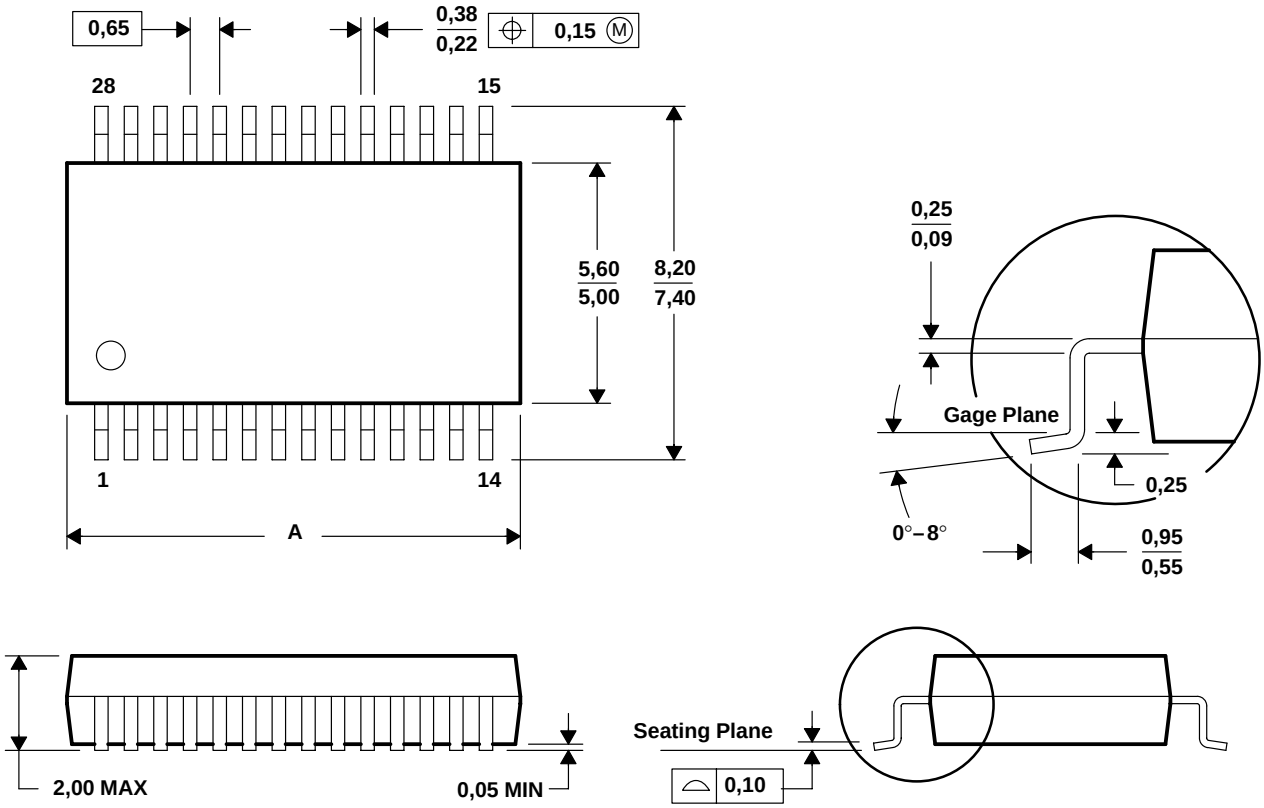

DIM \ PINS **	14	16	20	24	28	30	38
A MAX	6,50	6,50	7,50	8,50	10,50	10,50	12,90
A MIN	5,90	5,90	6,90	7,90	9,90	9,90	12,30

4040065 /E 12/01

NOTES: A. All linear dimensions are in millimeters.
B. This drawing is subject to change without notice.
C. Body dimensions do not include mold flash or protrusion not to exceed 0,15.
D. Falls within JEDEC MO-150

PW (R-PDSO-G)** **PLASTIC SMALL-OUTLINE PACKAGE**

14 PINS SHOWN

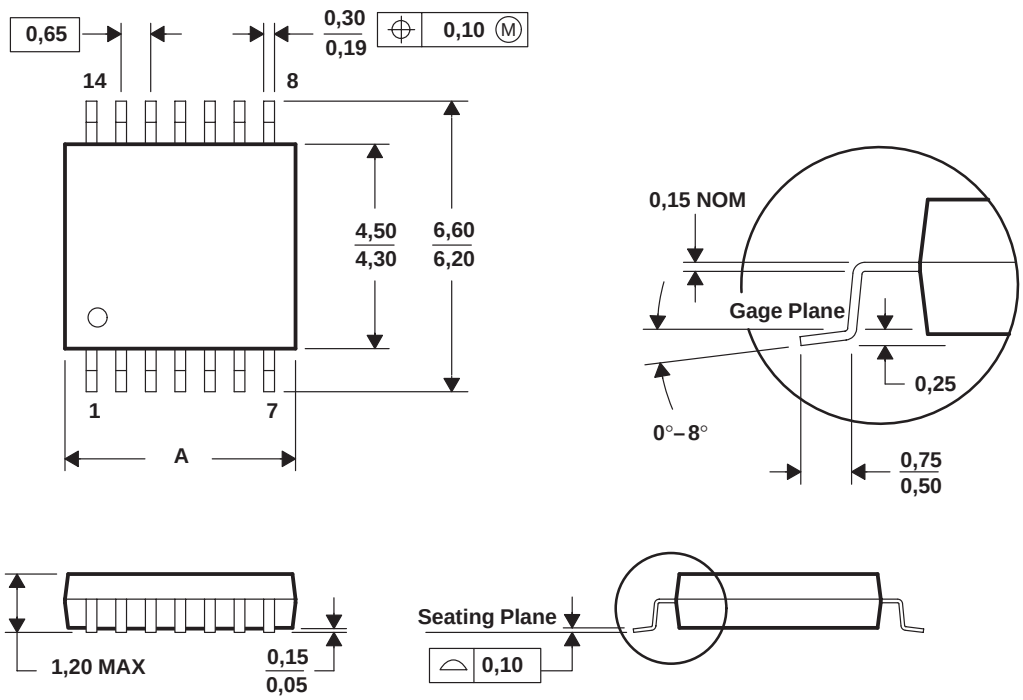

DIM \ PINS **	8	14	16	20	24	28
A MAX	3,10	5,10	5,10	6,60	7,90	9,80
A MIN	2,90	4,90	4,90	6,40	7,70	9,60

4040064/F 01/97

NOTES: A. All linear dimensions are in millimeters.
B. This drawing is subject to change without notice.
C. Body dimensions do not include mold flash or protrusion not to exceed 0,15.
D. Falls within JEDEC MO-153

IMPORTANT NOTICE

Texas Instruments Incorporated and its subsidiaries (TI) reserve the right to make corrections, modifications, enhancements, improvements, and other changes to its products and services at any time and to discontinue any product or service without notice. Customers should obtain the latest relevant information before placing orders and should verify that such information is current and complete. All products are sold subject to TI's terms and conditions of sale supplied at the time of order acknowledgment.

TI warrants performance of its hardware products to the specifications applicable at the time of sale in accordance with TI's standard warranty. Testing and other quality control techniques are used to the extent TI deems necessary to support this warranty. Except where mandated by government requirements, testing of all parameters of each product is not necessarily performed.

TI assumes no liability for applications assistance or customer product design. Customers are responsible for their products and applications using TI components. To minimize the risks associated with customer products and applications, customers should provide adequate design and operating safeguards.

TI does not warrant or represent that any license, either express or implied, is granted under any TI patent right, copyright, mask work right, or other TI intellectual property right relating to any combination, machine, or process in which TI products or services are used. Information published by TI regarding third-party products or services does not constitute a license from TI to use such products or services or a warranty or endorsement thereof. Use of such information may require a license from a third party under the patents or other intellectual property of the third party, or a license from TI under the patents or other intellectual property of TI.

Reproduction of information in TI data books or data sheets is permissible only if reproduction is without alteration and is accompanied by all associated warranties, conditions, limitations, and notices. Reproduction of this information with alteration is an unfair and deceptive business practice. TI is not responsible or liable for such altered documentation.

Resale of TI products or services with statements different from or beyond the parameters stated by TI for that product or service voids all express and any implied warranties for the associated TI product or service and is an unfair and deceptive business practice. TI is not responsible or liable for any such statements.

Following are URLs where you can obtain information on other Texas Instruments products and application solutions:

Products		**Applications**	
Amplifiers	amplifier.ti.com	Audio	www.ti.com/audio
Data Converters	dataconverter.ti.com	Automotive	www.ti.com/automotive
DSP	dsp.ti.com	Broadband	www.ti.com/broadband
Interface	interface.ti.com	Digital Control	www.ti.com/digitalcontrol
Logic	logic.ti.com	Military	www.ti.com/military
Power Mgmt	power.ti.com	Optical Networking	www.ti.com/opticalnetwork
Microcontrollers	microcontroller.ti.com	Security	www.ti.com/security
		Telephony	www.ti.com/telephony
		Video & Imaging	www.ti.com/video
		Wireless	www.ti.com/wireless

Mailing Address: Texas Instruments
Post Office Box 655303 Dallas, Texas 75265

Copyright © 2005, Texas Instruments Incorporated