- **Members of the Texas Instruments Widebus™ Family**
- **UBT™ Transceiver Combines D-Type Latches and D-Type Flip-Flops for Operation in Transparent, Latched, or Clocked Mode**
- **State-of-the-Art Advanced BiCMOS Technology (ABT) Design for 3.3-V Operation and Low Static-Power Dissipation**
- **Support Mixed-Mode Signal Operation (5-V Input and Output Voltages With 3.3-V V_{CC})**
- **Support Unregulated Battery Operation Down to 2.7 V**
- **Typical V_{OLP} (Output Ground Bounce) <0.8 V at V_{CC} = 3.3 V, T_A = 25°C**
- **I_{off} and Power-Up 3-State Support Hot Insertion**
- **Bus Hold on Data Inputs Eliminates the Need for External Pullup/Pulldown Resistors**
- **Distributed V_{CC} and GND Pins Minimize High-Speed Switching Noise**
- **Flow-Through Architecture Optimizes PCB Layout**
- **Latch-Up Performance Exceeds 500 mA Per JESD 17**
- **ESD Protection Exceeds JESD 22**
  - **2000-V Human-Body Model (A114-A)**
  - **200-V Machine Model (A115-A)**

SN54LVTH16501 . . . WD PACKAGE
SN74LVTH16501 . . . DGG OR DL PACKAGE
(TOP VIEW)

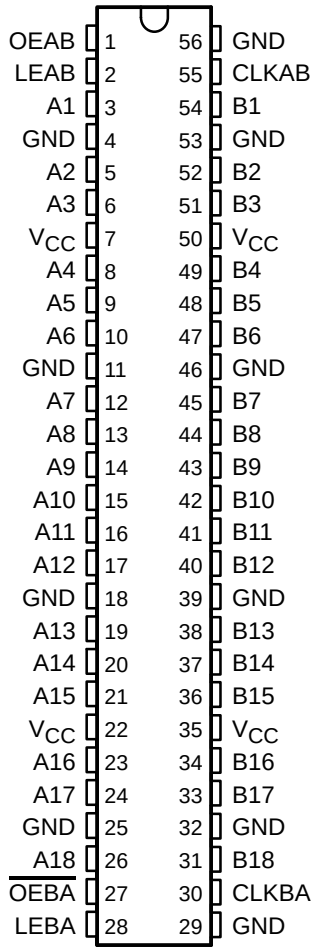

description/ordering information

The ’LVTH16501 devices are 18-bit universal bus transceivers designed for low-voltage (3.3-V) V_{CC} operation, but with the capability to provide a TTL interface to a 5-V system environment.

ORDERING INFORMATION

T_A	PACKAGE†		ORDERABLE PART NUMBER	TOP-SIDE MARKING
–40°C to 85°C	SSOP – DL	Tube	SN74LVTH16501DL	LVTH16501
		Tape and reel	SN74LVTH16501DLR	
	TSSOP – DGG	Tape and reel	SN74LVTH16501DGGR	LVTH16501
–55°C to 125°C	CFP – WD	Tube	SNJ54LVTH16501WD	SNJ54LVTH16501WD

† Package drawings, standard packing quantities, thermal data, symbolization, and PCB design guidelines are available at www.ti.com/sc/package.

Please be aware that an important notice concerning availability, standard warranty, and use in critical applications of Texas Instruments semiconductor products and disclaimers thereto appears at the end of this data sheet.

Widebus and UBT are trademarks of Texas Instruments.

PRODUCTION DATA information is current as of publication date. Products conform to specifications per the terms of Texas Instruments standard warranty. Production processing does not necessarily include testing of all parameters.

Copyright © 2002, Texas Instruments Incorporated

On products compliant to MIL-PRF-38535, all parameters are tested unless otherwise noted. On all other products, production processing does not necessarily include testing of all parameters.

description/ordering information (continued)

Data flow in each direction is controlled by output-enable (OEAB and $\overline{OEBA}$), latch-enable (LEAB and LEBA), and clock (CLKAB and CLKBA) inputs. For A-to-B data flow, the devices operate in the transparent mode when LEAB is high. When LEAB is low, the A data is latched if CLKAB is held at a high or low logic level. If LEAB is low, the A data is stored in the latch/flip-flop on the low-to-high transition of CLKAB. When OEAB is high, the outputs are active. When OEAB is low, the outputs are in the high-impedance state.

Data flow for B to A is similar to that of A to B but uses $\overline{OEBA}$, LEBA, and CLKBA. The output enables are complementary (OEAB is active high and $\overline{OEBA}$ is active low).

Active bus-hold circuitry holds unused or undriven inputs at a valid logic state. Use of pullup or pulldown resistors with the bus-hold circuitry is not recommended.

When V_{CC} is between 0 and 1.5 V, the devices are in the high-impedance state during power up or power down. However, to ensure the high-impedance state above 1.5 V, $\overline{OE}$ should be tied to V_{CC} through a pullup resistor and OE should be tied to GND through a pulldown resistor; the minimum value of the resistor is determined by the current-sinking/current-sourcing capability of the driver.

These devices are fully specified for hot-insertion applications using I_{off} and power-up 3-state. The I_{off} circuitry disables the outputs, preventing damaging current backflow through the devices when they are powered down. The power-up 3-state circuitry places the outputs in the high-impedance state during power up and power down, which prevents driver conflict.

FUNCTION TABLE†

INPUTS				OUTPUT
OEAB	LEAB	CLKAB	A	B
L	X	X	X	Z
H	H	X	L	L
H	H	X	H	H
H	L	↑	L	L
H	L	↑	H	H
H	L	H	X	B_0‡
H	L	L	X	B_0§

† A-to-B data flow is shown; B-to-A flow is similar, but uses $\overline{OEBA}$, LEBA, and CLKBA.

‡ Output level before the indicated steady-state input conditions were established, provided that CLKAB was high before LEAB went low

§ Output level before the indicated steady-state input conditions were established

logic diagram (positive logic)

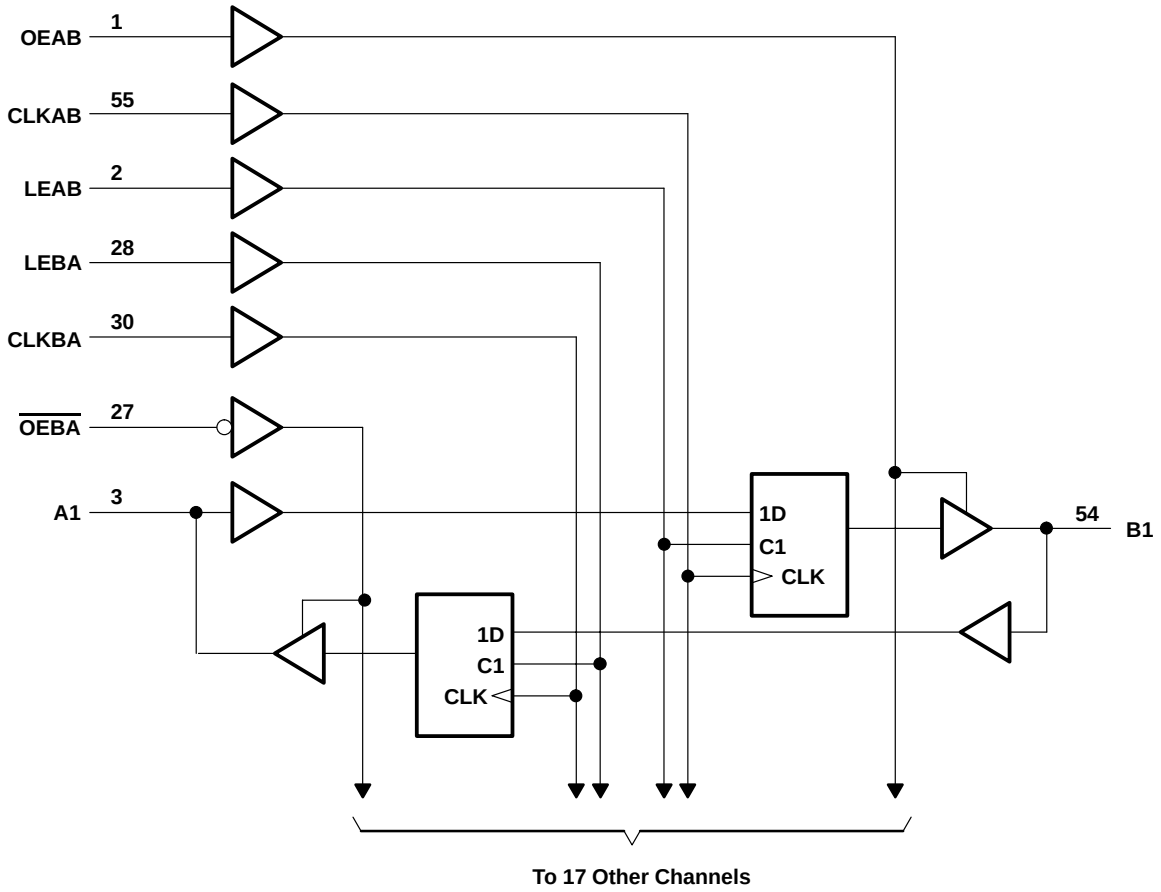

absolute maximum ratings over operating free-air temperature range (unless otherwise noted)†

Supply voltage range, V_{CC} . . . . . –0.5 V to 4.6 V
Input voltage range, V_I (see Note 1) . . . . . –0.5 V to 7 V
Voltage range applied to any output in the high-impedance
or power-off state, V_O (see Note 1) . . . . . –0.5 V to 7 V
Voltage range applied to any output in the high state, V_O (see Note 1) . . . . . –0.5 V to V_{CC} + 0.5 V
Current into any output in the low state, I_O: SN54LVTH16501 . . . . . 96 mA
SN74LVTH16501 . . . . . 128 mA
Current into any output in the high state, I_O (see Note 2): SN54LVTH16501 . . . . . 48 mA
SN74LVTH16501 . . . . . 64 mA
Input clamp current, I_{IK} (V_I < 0) . . . . . –50 mA
Output clamp current, I_{OK} (V_O < 0) . . . . . –50 mA
Package thermal impedance, θ_{JA} (see Note 3): DGG package . . . . . 64°C/W
DL package . . . . . 56°C/W
Storage temperature range, T_{stg} . . . . . –65°C to 150°C

† Stresses beyond those listed under “absolute maximum ratings” may cause permanent damage to the device. These are stress ratings only, and functional operation of the device at these or any other conditions beyond those indicated under “recommended operating conditions” is not implied. Exposure to absolute-maximum-rated conditions for extended periods may affect device reliability.

NOTES:
1. The input and output negative-voltage ratings may be exceeded if the input and output clamp-current ratings are observed.
2. This current flows only when the output is in the high state and $V_O > V_{CC}$.
3. The package thermal impedance is calculated in accordance with JESD 51-7.

recommended operating conditions (see Note 4)

			SN54LVTH16501		SN74LVTH16501		UNIT
			MIN	MAX	MIN	MAX	
V_{CC}	Supply voltage		2.7	3.6	2.7	3.6	V
V_{IH}	High-level input voltage		2		2		V
V_{IL}	Low-level input voltage			0.8		0.8	V
V_I	Input voltage			5.5		5.5	V
I_{OH}	High-level output current			–24		–32	mA
I_{OL}	Low-level output current			48		64	mA
$\Delta t/\Delta v$	Input transition rise or fall rate	Outputs enabled		10		10	ns/V
$\Delta t/\Delta V_{CC}$	Power-up ramp rate		200		200		µs/V
T_A	Operating free-air temperature		–55	125	–40	85	°C

NOTE 4: All unused control inputs of the device must be held at V_{CC} or GND to ensure proper device operation. Refer to the TI application report, *Implications of Slow or Floating CMOS Inputs*, literature number SCBA004.

electrical characteristics over recommended operating free-air temperature range (unless otherwise noted)

PARAMETER		TEST CONDITIONS		SN54LVTH16501 MIN	SN54LVTH16501 TYP†	SN54LVTH16501 MAX	SN74LVTH16501 MIN	SN74LVTH16501 TYP†	SN74LVTH16501 MAX	UNIT
V_{IK}		V_{CC} = 2.7 V,	I_I = –18 mA			–1.2			–1.2	V
V_{OH}		V_{CC} = 2.7 V to 3.6 V,	I_{OH} = –100 µA	V_{CC}–0.2			V_{CC}–0.2			V
		V_{CC} = 2.7 V,	I_{OH} = –8 mA	2.4			2.4			
		V_{CC} = 3 V	I_{OH} = –24 mA	2						
			I_{OH} = –32 mA				2			
V_{OL}		V_{CC} = 2.7 V	I_{OL} = 100 µA			0.2			0.2	V
			I_{OL} = 24 mA			0.5			0.5	
		V_{CC} = 3 V	I_{OL} = 16 mA			0.4			0.4	
			I_{OL} = 32 mA			0.5			0.5	
			I_{OL} = 48 mA			0.55				
			I_{OL} = 64 mA						0.55	
I_I	Control inputs	V_{CC} = 3.6 V,	V_I = V_{CC} or GND			±1			±1	µA
		V_{CC} = 0 or 3.6 V,	V_I = 5.5 V			10			10	
	A or B ports‡	V_{CC} = 3.6 V	V_I = 5.5 V			20			20	
			V_I = V_{CC}			1			1	
			V_I = 0			–5			–5	
I_{off}		V_{CC} = 0,	V_I or V_O = 0 to 4.5 V						±100	µA
$I_{I(hold)}$	A or B ports	V_{CC} = 3 V	V_I = 0.8 V	75			75			µA
			V_I = 2 V	–75			–75			
		V_{CC} = 3.6 V§,	V_I = 0 to 3.6 V						±500	
I_{OZPU}		V_{CC} = 0 to 1.5 V, V_O = 0.5 V to 3 V, $\overline{OE}$/OE = don't care				±100*			±100	µA
I_{OZPD}		V_{CC} = 1.5 V to 0, V_O = 0.5 V to 3 V, $\overline{OE}$/OE = don't care				±100*			±100	µA
I_{CC}		V_{CC} = 3.6 V, I_O = 0, V_I = V_{CC} or GND	Outputs high			0.19			0.19	mA
			Outputs low			5			5	
			Outputs disabled			0.19			0.19	
ΔI_{CC}¶		V_{CC} = 3 V to 3.6 V, One input at V_{CC} – 0.6 V, Other inputs at V_{CC} or GND				0.2			0.2	mA
C_i		V_I = 3 V or 0			4			4		pF
C_{io}		V_O = 3 V or 0			10			10		pF

* On products compliant to MIL-PRF-38535, this parameter is not production tested.
† All typical values are at V_{CC} = 3.3 V, T_A = 25°C.
‡ Unused pins at V_{CC} or GND
§ This is the bus-hold maximum dynamic current. It is the minimum overdrive current required to switch the input from one state to another.
¶ This is the increase in supply current for each input that is at the specified TTL voltage level rather than V_{CC} or GND.

timing requirements over recommended operating free-air temperature range (unless otherwise noted) (see Figure 1)

				SN54LVTH16501				SN74LVTH16501				UNIT
				V_{CC} = 3.3 V ± 0.3 V		V_{CC} = 2.7 V		V_{CC} = 3.3 V ± 0.3 V		V_{CC} = 2.7 V		
				MIN	MAX	MIN	MAX	MIN	MAX	MIN	MAX	
f_{clock}	Clock frequency				150		150		150		150	MHz
t_w	Pulse duration	LE high		3.3		3.3		3.3		3.3		ns
		CLK high or low		3.3		3.3		3.3		3.3		
t_{su}	Setup time	A before CLKAB↑		2.5		2.8		2.1		2.4		ns
		B before CLKBA↑		2.5		2.8		2.1		2.4		
		A or B before LE↓	CLK high	3.4		2.8		2.4		1.6		
			CLK low	2.2		1.3		1.4		0.5		
t_h	Hold time	A or B after CLK↑		2.2		1.5		1		0		ns
		A or B after LE↓		2.1		1.9		1.7		1.7		

switching characteristics over recommended operating free-air temperature range, C_L = 50 pF (unless otherwise noted) (see Figure 1)

PARAMETER	FROM (INPUT)	TO (OUTPUT)	SN54LVTH16501				SN74LVTH16501					UNIT
			V_{CC} = 3.3 V ± 0.3 V		V_{CC} = 2.7 V		V_{CC} = 3.3 V ± 0.3 V			V_{CC} = 2.7 V		
			MIN	MAX	MIN	MAX	MIN	TYP†	MAX	MIN	MAX	
f_{max}			150		150		150			150		MHz
t_{PLH}	B or A	A or B	1.2	4.3		4.7	1.3	2.7	3.7		4	ns
t_{PHL}			1.2	4.3		4.6	1.3	2.4	3.7		4	
t_{PLH}	LEBA or LEAB	A or B	1.4	6.2		6.6	1.5	3.4	5.1		5.7	ns
t_{PHL}			1.4	5.9		6.5	1.5	3.5	5.1		5.7	
t_{PLH}	CLKBA or CLKAB	A or B	1.2	6		6.7	1.3	3.5	5.1		5.7	ns
t_{PHL}			1.2	5.9		6.6	1.3	3.4	5.1		5.7	
t_{PZH}	$\overline{OEBA}$ or OEAB	A or B	1.2	5.5		5.9	1.3	3.4	4.8		5.5	ns
t_{PZL}			1.2	5.5		5.9	1.3	3.4	4.8		5.5	
t_{PHZ}	$\overline{OEBA}$ or OEAB	A or B	1.6	6.3		6.7	1.7	4.2	5.8		6.3	ns
t_{PLZ}			1.6	6.1		6.6	1.7	3.8	5.8		6.3	

† All typical values are at V_{CC} = 3.3 V, T_A = 25°C.

PARAMETER MEASUREMENT INFORMATION

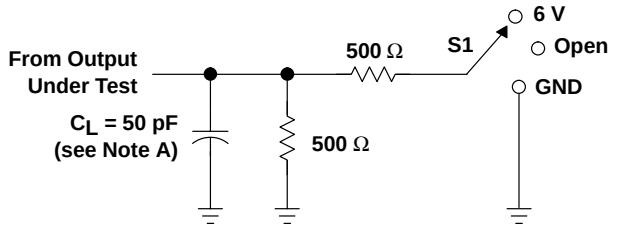

LOAD CIRCUIT

TEST	S1
t_{PLH}/t_{PHL}	Open
t_{PLZ}/t_{PZL}	6 V
t_{PHZ}/t_{PZH}	GND

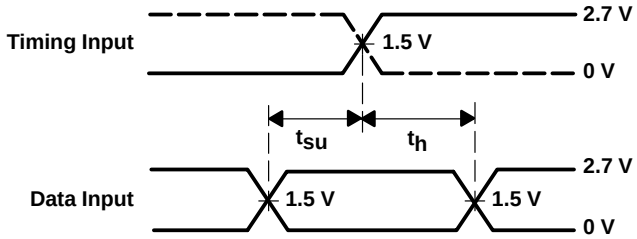

VOLTAGE WAVEFORMS
SETUP AND HOLD TIMES

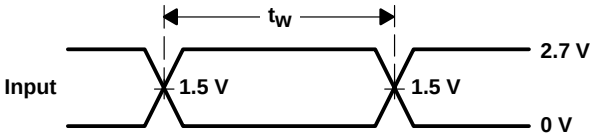

VOLTAGE WAVEFORMS
PULSE DURATION

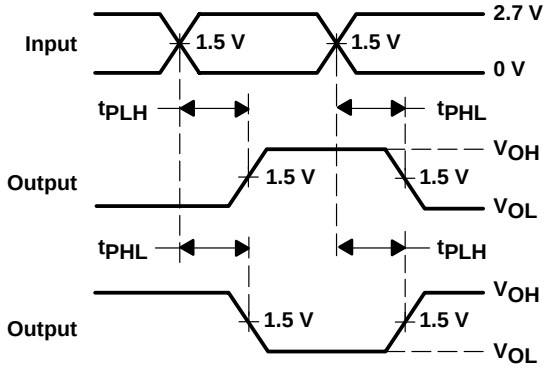

VOLTAGE WAVEFORMS
PROPAGATION DELAY TIMES
INVERTING AND NONINVERTING OUTPUTS

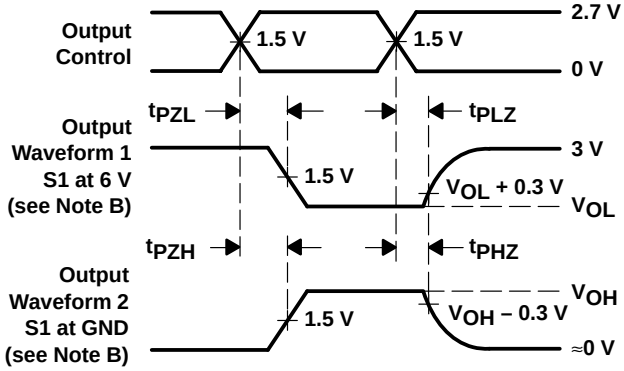

VOLTAGE WAVEFORMS
ENABLE AND DISABLE TIMES
LOW- AND HIGH-LEVEL ENABLING

NOTES: A. C_L includes probe and jig capacitance.
B. Waveform 1 is for an output with internal conditions such that the output is low except when disabled by the output control. Waveform 2 is for an output with internal conditions such that the output is high except when disabled by the output control.
C. All input pulses are supplied by generators having the following characteristics: PRR ≤ 10 MHz, Z_O = 50 Ω, t_r ≤ 2.5 ns, t_f ≤ 2.5 ns.
D. The outputs are measured one at a time with one transition per measurement.
E. All parameters and waveforms are not applicable to all devices.

Figure 1. Load Circuit and Voltage Waveforms

PACKAGING INFORMATION

Orderable Device	Status [1]	Package Type	Package Drawing	Pins	Package Qty	Eco Plan [2]	Lead/Ball Finish	MSL Peak Temp [3]
5962-9677701QXA	ACTIVE	CFP	WD	56	1	TBD	Call TI	Level-NC-NC-NC
74LVTH16501DGGRE4	ACTIVE	TSSOP	DGG	56	2000	Pb-Free (RoHS)	CU NIPDAU	Level-1-250C-UNLIM
74LVTH16501DLRG4	ACTIVE	SSOP	DL	56	1000	Green (RoHS & no Sb/Br)	CU NIPDAU	Level-1-260C-UNLIM
SN74LVTH16501DGGR	ACTIVE	TSSOP	DGG	56	2000	Pb-Free (RoHS)	CU NIPDAU	Level-1-250C-UNLIM
SN74LVTH16501DL	ACTIVE	SSOP	DL	56	20	Green (RoHS & no Sb/Br)	CU NIPDAU	Level-1-260C-UNLIM
SN74LVTH16501DLR	ACTIVE	SSOP	DL	56	1000	Green (RoHS & no Sb/Br)	CU NIPDAU	Level-1-260C-UNLIM
SNJ54LVTH16501WD	ACTIVE	CFP	WD	56	1	TBD	Call TI	Level-NC-NC-NC

[1] The marketing status values are defined as follows:
ACTIVE: Product device recommended for new designs.
LIFEBUY: TI has announced that the device will be discontinued, and a lifetime-buy period is in effect.
NRND: Not recommended for new designs. Device is in production to support existing customers, but TI does not recommend using this part in a new design.
PREVIEW: Device has been announced but is not in production. Samples may or may not be available.
OBSOLETE: TI has discontinued the production of the device.

[2] Eco Plan - The planned eco-friendly classification: Pb-Free (RoHS) or Green (RoHS & no Sb/Br) - please check http://www.ti.com/productcontent for the latest availability information and additional product content details.
TBD: The Pb-Free/Green conversion plan has not been defined.
Pb-Free (RoHS): TI's terms "Lead-Free" or "Pb-Free" mean semiconductor products that are compatible with the current RoHS requirements for all 6 substances, including the requirement that lead not exceed 0.1% by weight in homogeneous materials. Where designed to be soldered at high temperatures, TI Pb-Free products are suitable for use in specified lead-free processes.
Green (RoHS & no Sb/Br): TI defines "Green" to mean Pb-Free (RoHS compatible), and free of Bromine (Br) and Antimony (Sb) based flame retardants (Br or Sb do not exceed 0.1% by weight in homogeneous material)

[3] MSL, Peak Temp. -- The Moisture Sensitivity Level rating according to the JEDEC industry standard classifications, and peak solder temperature.

Important Information and Disclaimer: The information provided on this page represents TI's knowledge and belief as of the date that it is provided. TI bases its knowledge and belief on information provided by third parties, and makes no representation or warranty as to the accuracy of such information. Efforts are underway to better integrate information from third parties. TI has taken and continues to take reasonable steps to provide representative and accurate information but may not have conducted destructive testing or chemical analysis on incoming materials and chemicals. TI and TI suppliers consider certain information to be proprietary, and thus CAS numbers and other limited information may not be available for release.

In no event shall TI's liability arising out of such information exceed the total purchase price of the TI part(s) at issue in this document sold by TI to Customer on an annual basis.

WD (R-GDFP-F)** **CERAMIC DUAL FLATPACK**

48 LEADS SHOWN

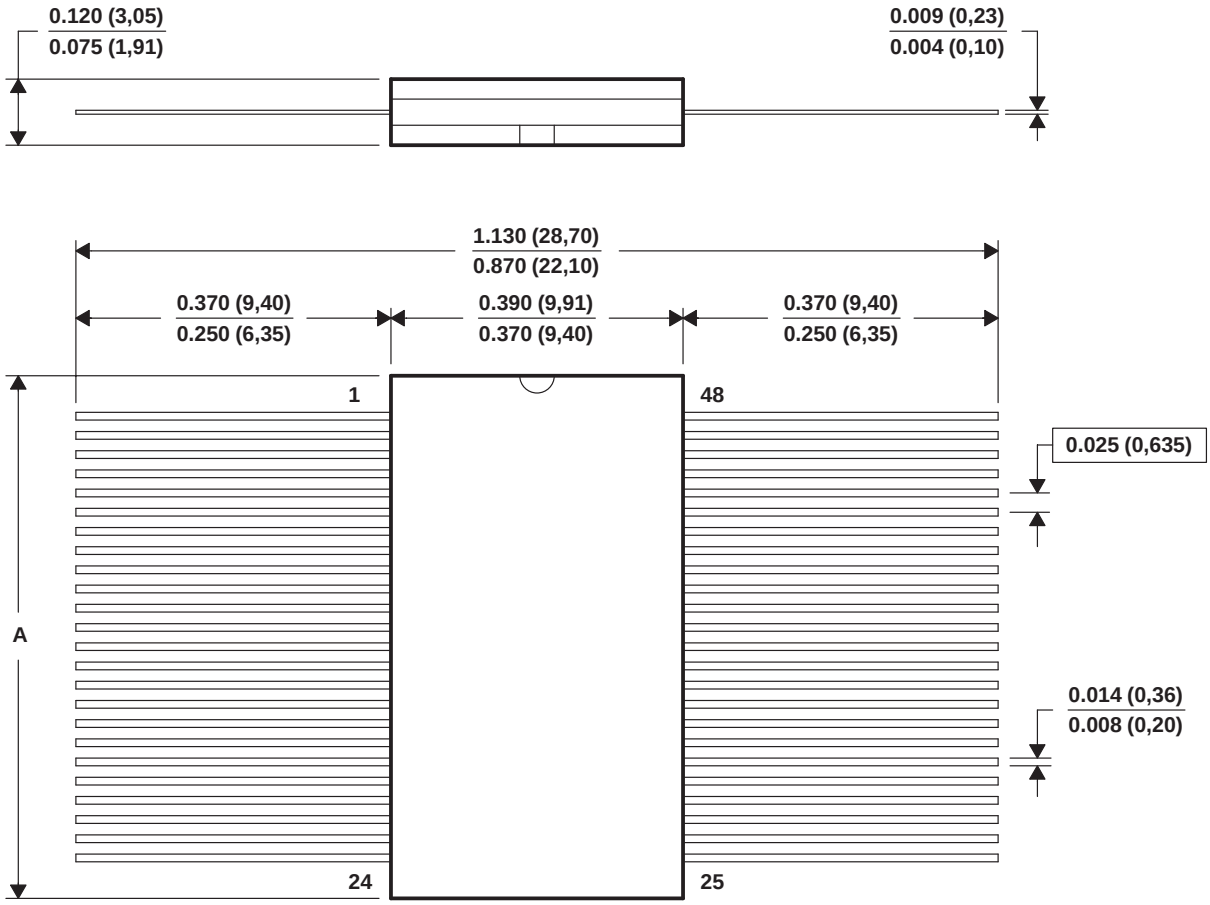

NO. OF LEADS**	48	56
A MAX	0.640 (16,26)	0.740 (18,80)
A MIN	0.610 (15,49)	0.710 (18,03)

4040176 / D 10/97

NOTES: A. All linear dimensions are in inches (millimeters).
B. This drawing is subject to change without notice.
C. This package can be hermetically sealed with a ceramic lid using glass frit.
D. Index point is provided on cap for terminal identification only
E. Falls within MIL STD 1835: GDFP1-F48 and JEDEC MO-146AA
GDFP1-F56 and JEDEC MO-146AB

DL (R-PDSO-G)** **PLASTIC SMALL-OUTLINE PACKAGE**

48 PINS SHOWN

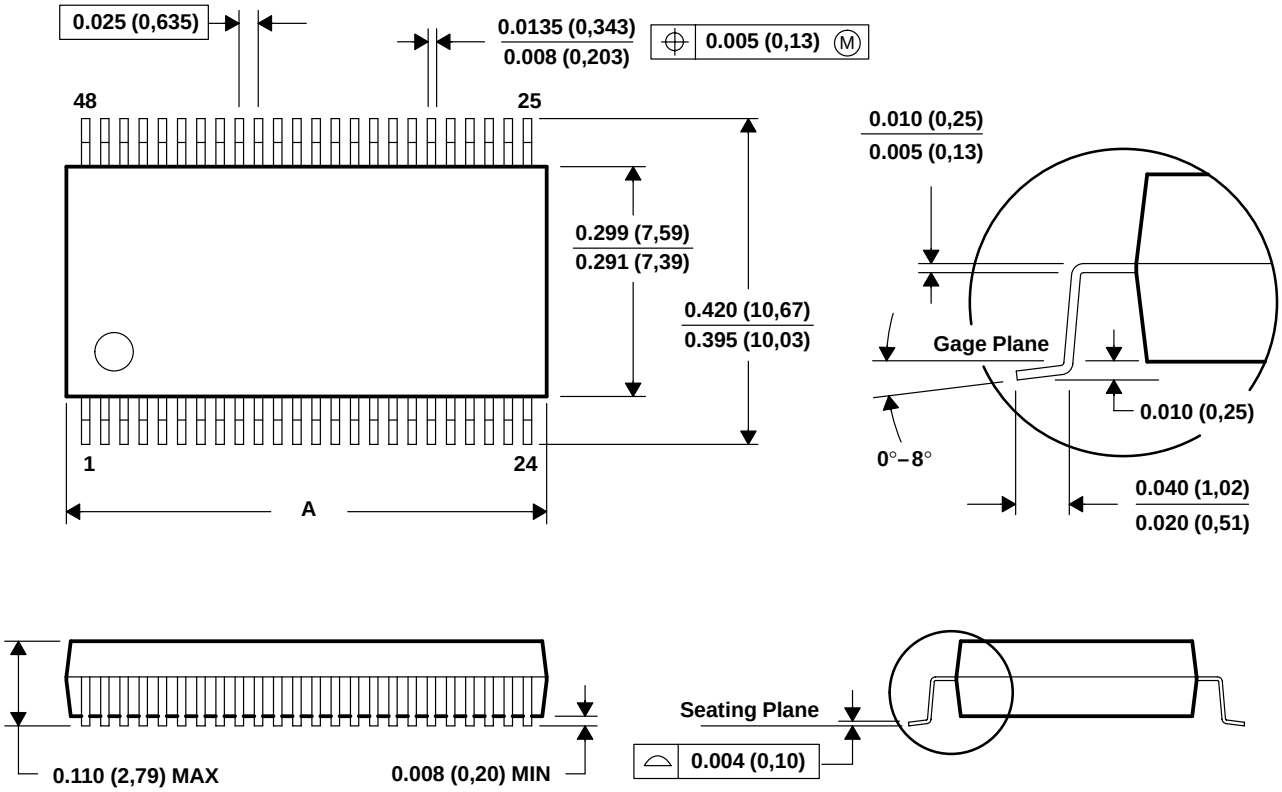

DIM \ PINS **	28	48	56
A MAX	0.380 (9,65)	0.630 (16,00)	0.730 (18,54)
A MIN	0.370 (9,40)	0.620 (15,75)	0.720 (18,29)

4040048/E 12/01

NOTES: A. All linear dimensions are in inches (millimeters).
B. This drawing is subject to change without notice.
C. Body dimensions do not include mold flash or protrusion not to exceed 0.006 (0,15).
D. Falls within JEDEC MO-118

DGG (R-PDSO-G)** **PLASTIC SMALL-OUTLINE PACKAGE**

48 PINS SHOWN

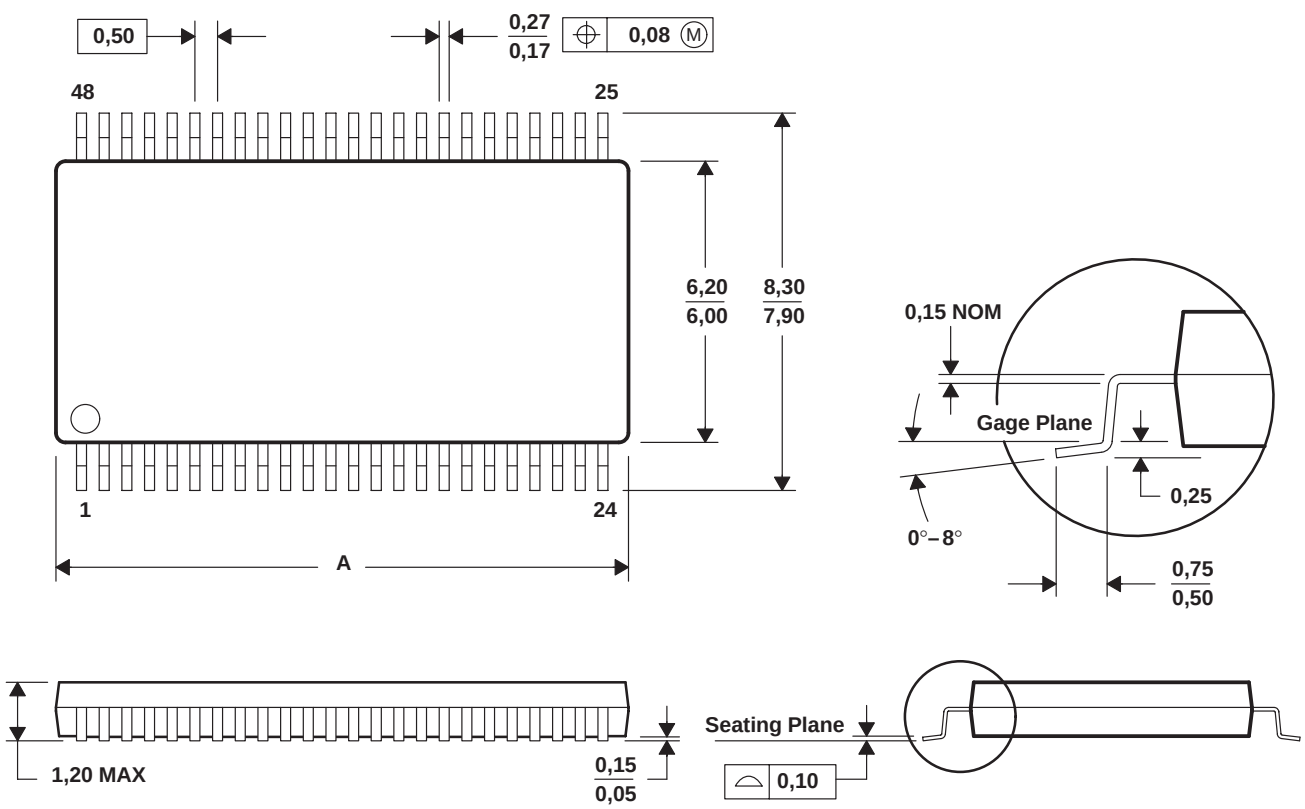

DIM \ PINS **	48	56	64
A MAX	12,60	14,10	17,10
A MIN	12,40	13,90	16,90

4040078/F 12/97

NOTES: A. All linear dimensions are in millimeters.
B. This drawing is subject to change without notice.
C. Body dimensions do not include mold protrusion not to exceed 0,15.
D. Falls within JEDEC MO-153

IMPORTANT NOTICE

Texas Instruments Incorporated and its subsidiaries (TI) reserve the right to make corrections, modifications, enhancements, improvements, and other changes to its products and services at any time and to discontinue any product or service without notice. Customers should obtain the latest relevant information before placing orders and should verify that such information is current and complete. All products are sold subject to TI's terms and conditions of sale supplied at the time of order acknowledgment.

TI warrants performance of its hardware products to the specifications applicable at the time of sale in accordance with TI's standard warranty. Testing and other quality control techniques are used to the extent TI deems necessary to support this warranty. Except where mandated by government requirements, testing of all parameters of each product is not necessarily performed.

TI assumes no liability for applications assistance or customer product design. Customers are responsible for their products and applications using TI components. To minimize the risks associated with customer products and applications, customers should provide adequate design and operating safeguards.

TI does not warrant or represent that any license, either express or implied, is granted under any TI patent right, copyright, mask work right, or other TI intellectual property right relating to any combination, machine, or process in which TI products or services are used. Information published by TI regarding third-party products or services does not constitute a license from TI to use such products or services or a warranty or endorsement thereof. Use of such information may require a license from a third party under the patents or other intellectual property of the third party, or a license from TI under the patents or other intellectual property of TI.

Reproduction of information in TI data books or data sheets is permissible only if reproduction is without alteration and is accompanied by all associated warranties, conditions, limitations, and notices. Reproduction of this information with alteration is an unfair and deceptive business practice. TI is not responsible or liable for such altered documentation.

Resale of TI products or services with statements different from or beyond the parameters stated by TI for that product or service voids all express and any implied warranties for the associated TI product or service and is an unfair and deceptive business practice. TI is not responsible or liable for any such statements.

Following are URLs where you can obtain information on other Texas Instruments products and application solutions:

Products		**Applications**	
Amplifiers	amplifier.ti.com	Audio	www.ti.com/audio
Data Converters	dataconverter.ti.com	Automotive	www.ti.com/automotive
DSP	dsp.ti.com	Broadband	www.ti.com/broadband
Interface	interface.ti.com	Digital Control	www.ti.com/digitalcontrol
Logic	logic.ti.com	Military	www.ti.com/military
Power Mgmt	power.ti.com	Optical Networking	www.ti.com/opticalnetwork
Microcontrollers	microcontroller.ti.com	Security	www.ti.com/security
		Telephony	www.ti.com/telephony
		Video & Imaging	www.ti.com/video
		Wireless	www.ti.com/wireless

Mailing Address: Texas Instruments
Post Office Box 655303 Dallas, Texas 75265

Copyright © 2005, Texas Instruments Incorporated