Data Sheet
Rev 6, 5/2006

ACT6700/6701/6702

MobileLDO™ High Performance Low Dropout Regulators

FEATURES

- 110mV Typical Dropout with 150mA Load
- Very Low 23µA Supply Current
- 1.5% Voltage Accuracy
- 450mA Typical Current Limit
- Thermal Shutdown Protection
- Fold-back Current Limit Protection
- 1.5V to 5V Fixed Output Voltages
- Power-Good Indicator (ACT6701)
- Low Noise Bypass Pin (ACT6702)
- Stable with Wide Range of Capacitance
- Compact SOT23-3 and SOT23-5 Packages and also SOT89-3 for ACT6700

APPLICATIONS

- Cellular Handsets
- Battery-Powered Equipment
- Personal Communication Devices
- Portable Information Devices
- Peripherals, Consumer Electronics

GENERAL DESCRIPTION

The ACT670_ MobileLDO™ series products are high performance low dropout voltage regulators designed for portable applications with very low quiescent current (23µA) and dropout voltage (110mV at 150mA).

The ACT670_ LDOs have typical current limit of 450mA and are available in high accuracy (1.5%) output voltages from 1.5V to 5V in 50mV increments. These products feature thermal shutdown protection and current limit with fold-back in short circuit.

The ACT6700 is available in the SOT23-3 and SOT89-3 packages. The ACT6701 is available in the SOT23-5 package and includes a power-good indicator output. The ACT6702 is available in the SOT23-5 package and includes a low noise bypass pin for low noise applications. These products are ideal for portable information devices, cellular phones, and other battery powered applications.

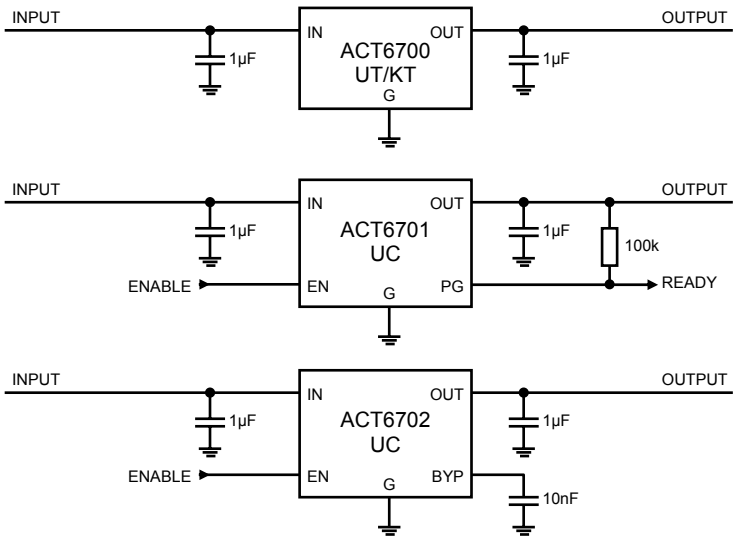

Figure 1. Typical MobileLDO™ Application Circuits

ORDERING INFORMATION[1]

PART NUMBER[2]	ADDITIONAL FUNCTION	OUTPUT VOLTAGE (V)	TEMPERATURE RANGE	PACKAGE	PINS
ACT6700UTxyz-T	—	x.yz	-40°C to 85°C	SOT23-3	3
ACT6700KTxyz-T	—	x.yz	-40°C to 85°C	SOT89-3	3
ACT6701UCxyz-T	Power Good	x.yz	-40°C to 85°C	SOT23-5	5
ACT6702UCxyz-T	Noise Bypass	x.yz	-40°C to 85°C	SOT23-5	5

[1] Contact factory for parts availability and other package options.

[2] xyz indicates output voltage. For example, xyz=285 for 2.85V.

PART NUMBER	TOP MARK									
	150 (1.5V)	180 (1.8V)	250 (2.5V)	260 (2.6V)	270 (2.7V)	280 (2.8V)	285 (2.85V)	300 (3.0V)	330 (3.3V)	350 (3.5V)
ACT6700UT___-T	SHCH	SHCA	SHCB	SHCC	SHCD	SHCL	SHCE	SHCF	SHCG	SHCJ
ACT6700KT___-T	SHOH	SHOA	SHOB	SHOC	SHOD	SHOL	SHOE	SHOF	SHOG	SHOJ
ACT6701UC___-T	SHAH	SHAA	SHAB	SHAC	SHAD	SHAL	SHAE	SHAF	SHAG	SHAJ
ACT6702UC___-T	SHBH	SHBA	SHBB	SHBC	SHBD	SHBL	SHBE	SHBF	SHBG	SHBJ

PIN CONFIGURATION

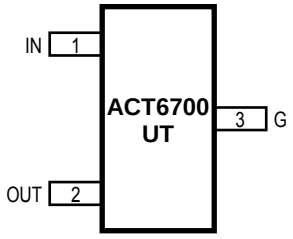

SOT23-3

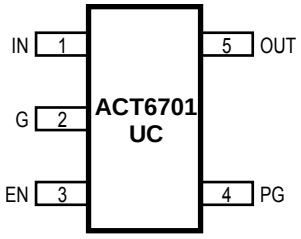

SOT23-5

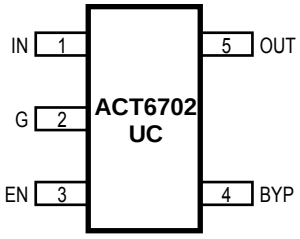

SOT23-5

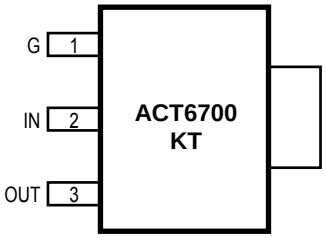

SOT89-3

PIN DESCRIPTION

PIN NUMBER				PIN NAME	PIN DESCRIPTION
ACT6700 SOT23-3	ACT6700 SOT89-3	ACT6701 SOT23-5	ACT6702 SOT23-5		
1	2	1	1	IN	Input Voltage.
3	1	2	2	G	Ground.
--		3	3	EN	(ACT6701/6702 only) Enable Input. High level enables the LDO. Connect this pin to IN if not used; do not leave EN unconnected.
--		4	--	PG	(ACT6701 only) Power-Good Open Drain Indicator. Connect to an external pull-up resistor. Low level indicates that the output voltage is out of regulation. This output has high impedance when EN = 0.
--	--	--	4	BYP	(ACT6702 only) Low Noise Bypass Pin. Connect a 10nF capacitor from BYP to G.
2	3	5	5	OUT	Output.

ABSOLUTE MAXIMUM RATINGS

(Note: Exceeding these limits may damage the device. Exposure to absolute maximum rating conditions for long periods may affect device reliability.)

PARAMETER		VALUE	UNIT
IN Supply Voltage		-0.3 to 6	V
OUT Voltage		-0.3 to V_{IN} + 0.3	V
EN, PG, BYP Voltage		-0.3 to 6	V
Continuous OUT Current		Internally limited	A
Maximum Power Dissipation (derate 5mW/°C above T_A = 50°C)	SOT23-3	0.5	W
	SOT23-5	0.53	
	SOT89-3	0.77	
Junction to Ambient Thermal Resistance (θ_{JA})	SOT23-3	200	°C/W
	SOT23-5	190	
	SOT89-3	130	
Operating Junction Temperature		-40 to 150	°C
Storage Temperature		-55 to 150	°C
Lead Temperature (Soldering, 10 sec)		300	°C

ELECTRICAL CHARACTERISTICS

(V_{IN} = Greater of 3.3V or V_{OUT} + 0.5V, EN = IN, C_{OUT} = 1μF, T_J = 25°C unless otherwise specified.)

PARAMETER	SYMBOL	TEST CONDITIONS		MIN	TYP	MAX	UNIT
Output Voltage Accuracy	ΔV_{OUT}	T_J = 25°C		-1.5	0	1.5	%
		T_J = -40°C to 125°C		-2.5	0	2.5	
Line Regulation Error		V_{IN} = Greater of 2.5V or V_{OUT} + 0.5V to V_{IN} = 5.5V			0		mV
Load Regulation Error		I_{OUT} = 1mA to 150mA			-0.004		%/mA
Power Supply Rejection Ratio	PSRR	f = 1kHz, I_{OUT} = 150mA, C_{OUT} = 1μF			56		dB
		f = 10kHz, I_{OUT} = 150mA, C_{OUT} = 1μF			46		
Supply Current	I_Q	EN = 1.4V			23	45	μA
		EN = 0.4V			0	1	
Dropout Voltage (1)	V_{DO}	I_{OUT} = 150mA	2.8 ≤ V_{OUT}		110	150	mV
			2.5 ≤ V_{OUT} < 2.8V		140	220	
Current Limit (2)	I_{LIM}			300	450		mA
Current Limit Short Circuit Foldback	I_{LIMSC}	V_{OUT} < 1V			160		mA
Output Noise		ACT6702 with C_{OUT} = 10μF, C_{BYP} =10nF, f = 10Hz to 100kHz			40		μV_{RMS}
		ACT6700/6701 with C_{OUT} = 10μF, f = 10Hz to 100kHz			120		
Stable C_{OUT}				1		20	μF
Thermal Shutdown Temperature					155		°C
Thermal Shutdown Hysteresis					20		°C
ACT6701/6702 ENABLE (EN) INPUT							
EN Input Logic Low Threshold	V_{IL}	T_J = -40°C to 125°C				0.4	V
EN Input Logic High Threshold	V_{IH}	T_J = -40°C to 125°C		1.5			V
EN Input Current		V_{EN} = 5.5V			0	0.1	μA
ACT6701 POWER-GOOD (PG) OUTPUT							
PG High Threshold		V_{OUT} rising, hysteresis = -1%			94.5		%
PG Output Low Voltage		100μA pull-up				0.05	V
PG Leakage Current		Fault condition, V_{PG} = 5.5V			0	0.1	μA

(1) Dropout Voltage is defined as the different voltage between input and output when the output voltage drops 100mV below the regulation voltage at 1V different voltage.

(2) Current Limit is measured at by forcing output voltage to 95% of regulation voltage.

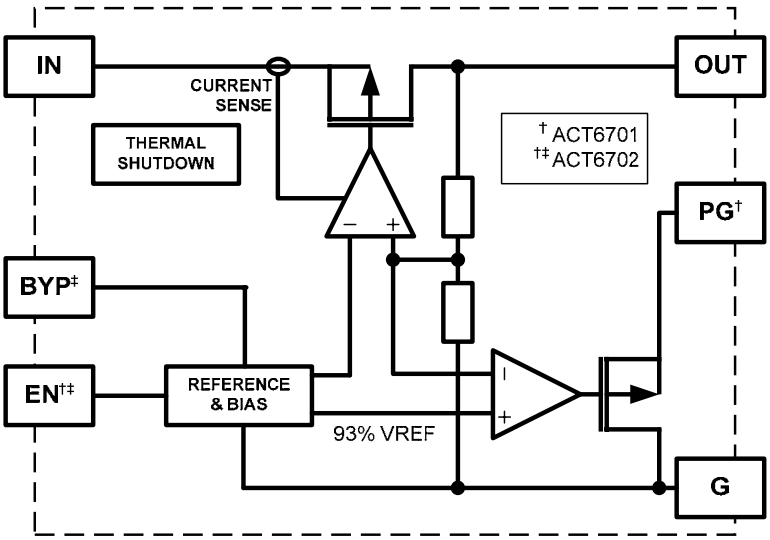

Figure 2. Functional Block Diagram

FUNCTIONAL DESCRIPTION

The ACT670_ series are high performance LDOs with very low quiescent current consumption.

As illustrated in Figure 2, *Functional Block Diagram*, the ACT670_ LDO architecture consists of a low noise reference and bias circuitry, an error amplifier, feedback voltage resistor divider, 0.74Ω P-channel power MOSFET pass transistor, current limiter, and thermal shutdown circuitry. In addition, the ACT6701 also contains a power-good comparator with indicator output and shutdown control. The ACT6702 contains low noise reference bypass and shutdown control.

VOLTAGE REGULATION

Normally, the LDO's error amplifier compares the output feedback voltage (via the resistor divider) with the reference voltage and generates an error signal that is used to drive the P-channel power MOSFET. When the output voltage is higher than the needed value, the P-channel is driven off so that there is no output current. When the output voltage is lower than the needed value, the P-channel conducts to increase the output to its desired value.

CURRENT LIMIT

When the output current is at the current limit value, the current limiter circuitry pulls back the power MOSFET gate to prevent its current from increasing further. This current limit value is typically 450mA for the ACT670_. However, for output voltage lower than 1V, the current limit folds back to one-third of its original value.

THERMAL SHUTDOWN

If the die temperature exceeds the thermal protection threshold of 155°C, the IC turns off to allow for the die to cool down. When the die temperature decreases to about 135°C, the IC turns on again, resulting in a thermal cycling mode.

SHUTDOWN CONTROL

The ACT6701/6702 have an enable input EN for turning the IC on or off. When EN is less than 0.4V, the IC is in low leakage current shutdown mode. When EN is higher than 1.5V, the IC is in normal mode.

POWER-GOOD INDICATOR (ACT6701)

The power-good comparator in the ACT6701 detects when the output voltage falls below regulation point (93% of normal V_{OUT}) and pulls the PG open to drain output low to indicate a fault condition. When the output voltage is higher than 94.5% of normal V_{OUT}, the PG output becomes high impedance. When IC is in shutdown, the PG output is also high impedance.

LOW NOISE BYPASS (ACT6702)

The ACT6702 includes a low noise reference bypass pin BYP to filter high frequency noise to the error amplifier and a startup circuitry to fast charge BYP when the IC is turned on. Connect a 10nF capacitor from BYP pin to ground to reduce output noise to 40μV_{RMS}. The startup time with 10nF bypass capacitor is about 250μs.

APPLICATION INFORMATION

INPUT CAPACITOR

Any good quality capacitor with 1µF or greater value can be used as an input capacitor for the ACT670_. Connect the input capacitor as close to IN and G as possible. Ceramic capacitors have better performance and lower ESR (Equivalent Series Resistance) than other types of capacitors, and are recommended.

OUTPUT CAPACITOR

The ACT670_ LDOs need output capacitors for stability. These capacitors should be connected as close to OUT and G as possible to maximize performance. The output capacitance and ESR ranges for stability are shown in the *Typical Performance Characteristics*. However, to ensure best performance for the device, the output capacitor should have a minimum capacitance of 1µF, and an ESR value between 10mΩ and 500mΩ. High quality ceramic capacitors with X7R or X5R dielectric types are strongly recommended.

POWER-GOOD OUTPUT

When using the ACT6701's power-good indicator output, connect an external 100kΩ pull-up resistor from PG to V_{OUT} or to another supply rail. A low level indicates that the output voltage is out of regulation and can be used to reset the load. A capacitor can be added between PG and ground to add rising edge delay to the reset signal.

BYPASS PIN CAPACITOR

For the ACT6702 low noise bypass pin, the capacitor type and capacitor material is not as critical as input and output capacitors. Any good quality 10nF capacitor can be used in this application. Capacitor with larger amount of capacitance will increase the startup time. It is critical that the PCB traces for the connection of the capacitor should be direct and as short as possible.

TYPICAL PERFORMANCE CHARACTERISTICS

(Circuit of Figure 1, capacitors = 1µF X7R, V_{IN} = 3.3V, T_A = 25°C unless otherwise specified.)

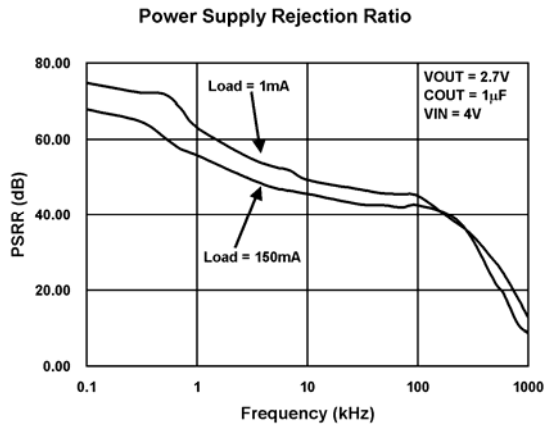

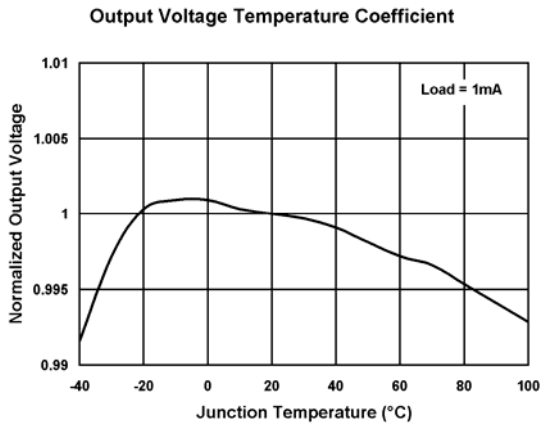

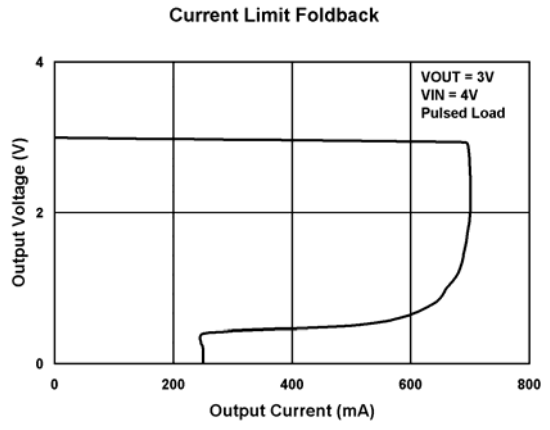

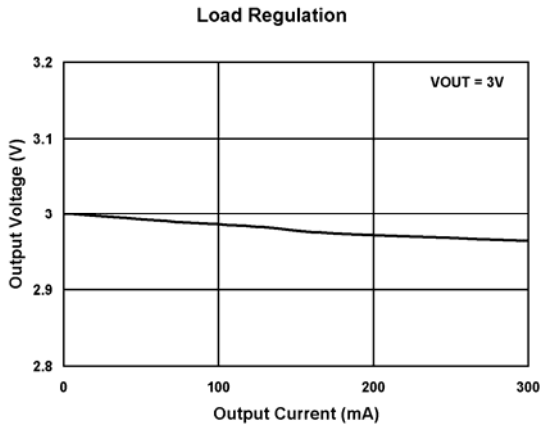

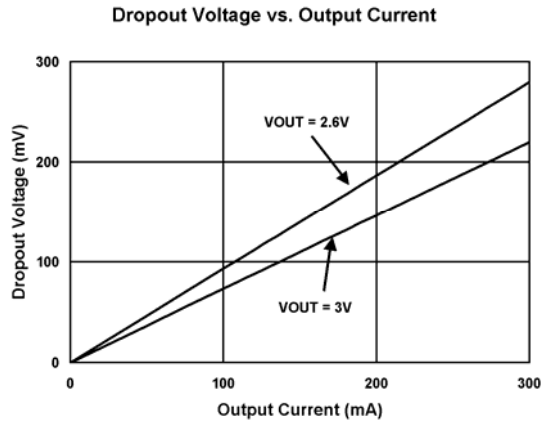

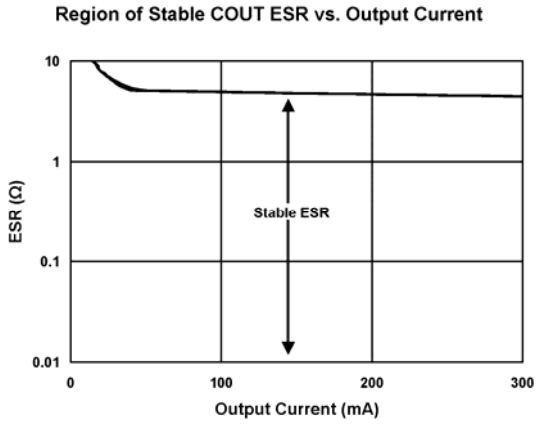

TYPICAL PERFORMANCE CHARACTERISTICS CONT'D

(Circuit of Figure 1, capacitors = 1µF X7R, V_{IN} = 3.3V, T_A = 25°C unless otherwise specified.)

Load Step Response

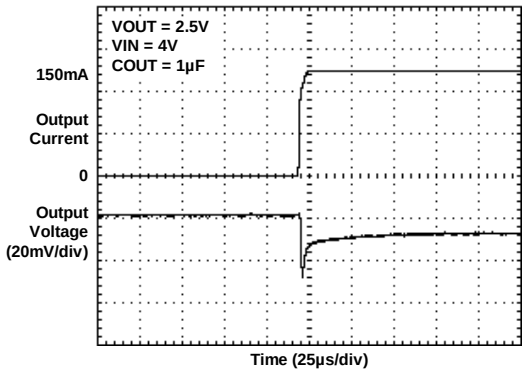

Load Step Response

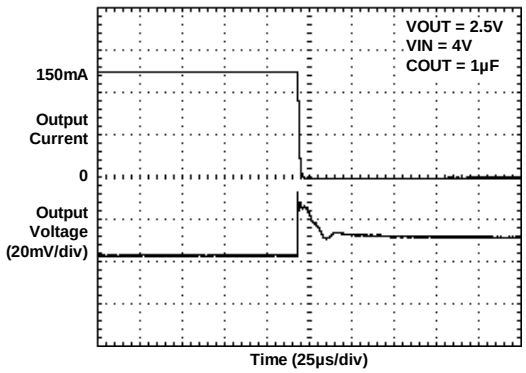

Line Step Response

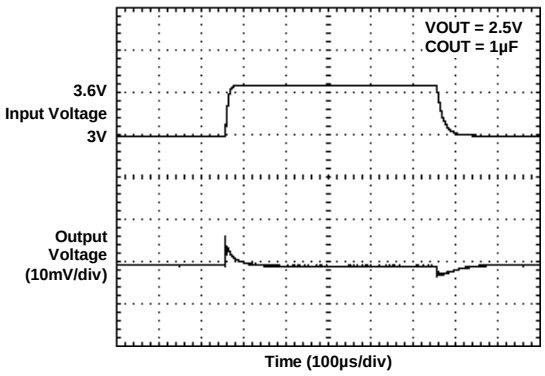

ACT6702/6712 Output Voltage Noise

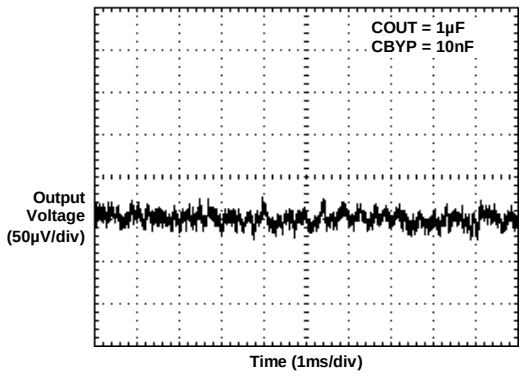

PACKAGE OUTLINE

SOT23-3 PACKAGE OUTLINE AND DIMENSIONS

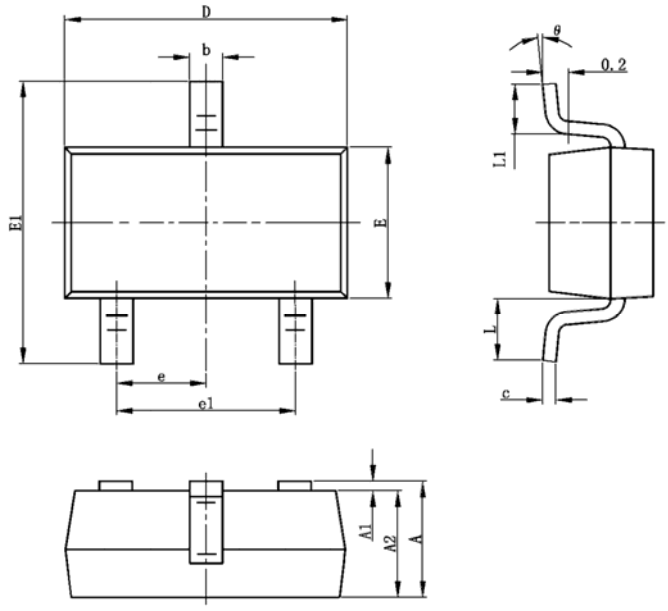

SYMBOL	DIMENSION IN MILLIMETERS		DIMENSION IN INCHES	
	MIN	MAX	MIN	MAX
A	1.050	1.250	0.041	0.049
A1	0.000	0.100	0.000	0.004
A2	1.050	1.150	0.041	0.045
b	0.300	0.400	0.012	0.016
c	0.100	0.200	0.004	0.008
D	2.820	3.020	0.111	0.119
E	1.500	1.700	0.059	0.067
E1	2.650	2.950	0.104	0.116
e	0.950 TYP		0.037 TYP	
e1	1.800	2.000	0.071	0.079
L	0.700 REF		0.028 REF	
L1	0.300	0.600	0.012	0.024
θ	0°	8°	0°	8°

SOT23-5 PACKAGE OUTLINE AND DIMENSIONS

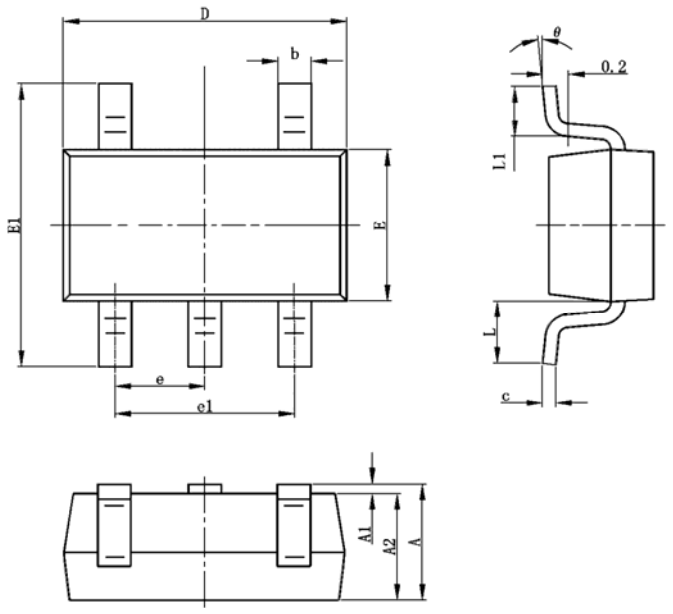

SYMBOL	DIMENSION IN MILLIMETERS		DIMENSION IN INCHES	
	MIN	MAX	MIN	MAX
A	1.050	1.250	0.041	0.049
A1	0.000	0.100	0.000	0.004
A2	1.050	1.150	0.041	0.045
b	0.300	0.400	0.012	0.016
c	0.100	0.200	0.004	0.008
D	2.820	3.020	0.111	0.119
E	1.500	1.700	0.059	0.067
E1	2.650	2.950	0.104	0.116
e	0.950 TYP		0.037 TYP	
e1	1.800	2.000	0.071	0.079
L	0.700 REF		0.028 REF	
L1	0.300	0.600	0.012	0.024
θ	0°	8°	0°	8°

SOT89-3 PACKAGE OUTLINE AND DIMENSIONS

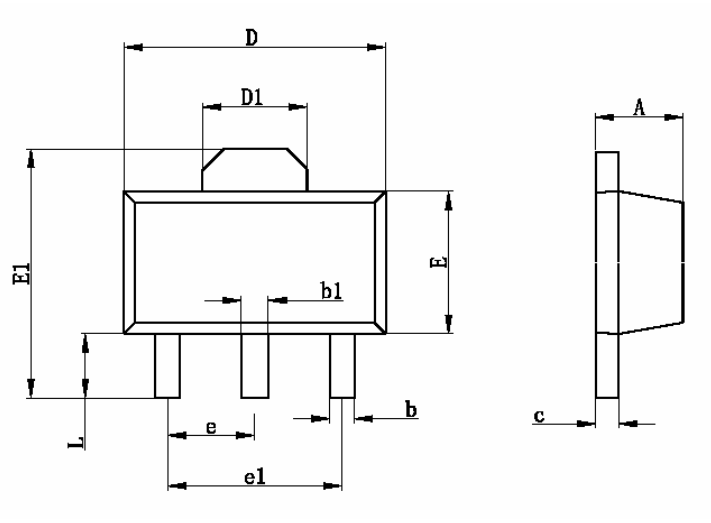

SYMBOL	DIMENSION IN MILLIMETERS		DIMENSION IN INCHES	
	MIN	MAX	MIN	MAX
A	1.400	1.600	0.055	0.063
b	0.320	0.520	0.013	0.020
B1	0.400	0.580	0.016	0.023
c	0.350	0.440	0.014	0.017
D	4.400	4.600	0.173	0.181
D1	1.550 REF.		0.061 REF.	
E	2.300	2.600	0.091	0.102
E1	3.940	4.250	0.155	0.167
e	1.500 TYP		0.060	
e1	3.000 TYP		0.118	
L	0.900	1.200	0.035	0.047

Active-Semi, Inc. reserves the right to modify the circuitry or specifications without notice. Users should evaluate each product to make sure that it is suitable for their applications. Active-Semi products are not intended or authorized for use as critical components in life-support devices or systems. Active-Semi, Inc. does not assume any liability arising out of the use of any product or circuit described in this data sheet, nor does it convey any patent license.

Active-Semi and its logo are trademarks of Active-Semi, Inc. For more information on this and other products, contact sales@active-semi.com or visit www.active-semi.com. For other inquiries, please send to:

1270 Oakmead Parkway, Suite 310, Sunnyvale, California 94085-4044, USA