STW26NM60

N-CHANNEL 600V - 0.125Ω - 30A TO-247
MDmesh™ MOSFET

Table 1: General Features

TYPE	V_{DSS}	$R_{DS(on)}$	I_D
STW26NM60	600 V	< 0.135 Ω	30 A

- TYPICAL R_{DS}(on) = 0.125 Ω
- HIGH dv/dt AND AVALANCHE CAPABILITIES
- IMPROVED ESD CAPABILITY
- LOW INPUT CAPACITANCE AND GATE CHARGE
- LOW GATE INPUT RESISTANCE

Figure 1: Package

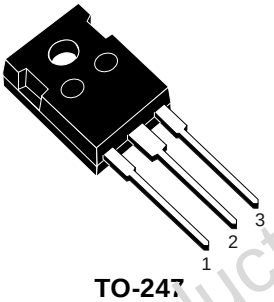

TO-247

Figure 2: Internal Schematic Diagram

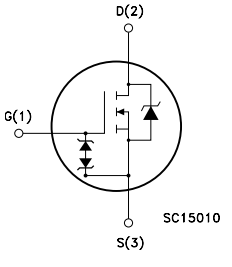

DESCRIPTION

The MDmesh™ is a new revolutionary MOSFET technology that associates the Multiple Drain process with the Company's PowerMESH™ horizontal layout. The resulting product has an outstanding low on-resistance, impressively high dv/dt and excellent avalanche characteristics. The adoption of the Company's proprietary strip technique yields overall dynamic performance that is significantly better than that of similar competition's products.

APPLICATIONS

The MDmesh™ family is very suitable for increasing power density of high voltage converters allowing system miniaturization and higher efficiencies.

Table 2: Order Codes

SALES TYPE	MARKING	PACKAGE	PACKAGING
STW26NM60	W26NM60	TO-247	TUBE

Obsolete Product(s) - Obsolete Product(s)

Rev. 5

Table 3: Absolute Maximum ratings

Symbol	Parameter	Value	Unit
V_{DS}	Drain-source Voltage (V_{GS} = 0)	600	V
V_{DGR}	Drain-gate Voltage (R_{GS} = 20 kΩ)	600	V
V_{GS}	Gate- source Voltage	± 30	V
I_D	Drain Current (continuous) at T_C = 25°C	30	A
I_D	Drain Current (continuous) at T_C = 100°C	18.9	A
I_{DM} (•)	Drain Current (pulsed)	120	A
P_{TOT}	Total Dissipation at T_C = 25°C	313	W
	Derating Factor	2.5	W/°C
$V_{ESD(G-S)}$	Gate source ESD(HBM-C=100pF, R=1.5KΩ)	6000	V
dv/dt (1)	Peak Diode Recovery voltage slope	15	V/ns
T_j T_{stg}	Operating Junction Temperature Storage Temperature	-55 to 150	°C

(•) Pulse width limited by safe operating area
(1) I_{SD} ≤26A, di/dt ≤200A/µs, $V_{DD} \leq V_{(BR)DSS}$, $T_j \leq T_{JMAX.}$

Table 4: Thermal Data

Rthj-case	Thermal Resistance Junction-case Max	0.4	°C/W
Rthj-amb	Thermal Resistance Junction-ambient Max	62.5	°C/W
T_l	Maximum Lead Temperature For Soldering Purpose	300	°C

Table 5: Avalanche Characteristics

Symbol	Parameter	Max Value	Unit
I_{AR}	Avalanche Current, Repetitive or Not-Repetitive (pulse width limited by T_j max)	13	A
E_{AS}	Single Pulse Avalanche Energy (starting T_j = 25 °C, I_D = I_{AR}, V_{DD} = 50 V)	740	mJ

ELECTRICAL CHARACTERISTICS (T_{CASE} =25°C UNLESS OTHERWISE SPECIFIED)

Table 6: Gate-Source Zener Diode

Symbol	Parameter	Test Conditions	Min.	Typ.	Max.	Unit
BV_{GSO}	Gate-Source Breakdown Voltage	Igss=± 1mA (Open Drain)	30			V

PROTECTION FEATURES OF GATE-TO-SOURCE ZENER DIODES

The built-in back-to-back Zener diodes have specifically been designed to enhance not only the device's ESD capability, but also to make them safely absorb possible voltage transients that may occasionally be applied from gate to source. In this respect the Zener voltage is appropriate to achieve an efficient and cost-effective intervention to protect the device's integrity. These integrated Zener diodes thus avoid the usage of external components.

Obsolete Product(s) - Obsolete Product(s)

Table 7: On /Off

Symbol	Parameter	Test Conditions	Min.	Typ.	Max.	Unit
$V_{(BR)DSS}$	Drain-source Breakdown Voltage	I_D = 250 µA, V_{GS} = 0	600			V
I_{DSS}	Zero Gate Voltage Drain Current (V_{GS} = 0)	V_{DS} = Max Rating V_{DS} = Max Rating, T_C = 125°C			10 100	µA µA
I_{GSS}	Gate-body Leakage Current (V_{DS} = 0)	V_{GS} = ± 20 V			± 10	µA
$V_{GS(th)}$	Gate Threshold Voltage	V_{DS} = V_{GS}, I_D = 250 µA	3	4	5	V
$R_{DS(on}$	Static Drain-source On Resistance	V_{GS} = 10 V, I_D = 13 A		0.125	0.135	Ω

Table 8: Dynamic

Symbol	Parameter	Test Conditions	Min.	Typ.	Max.	Unit
g_{fs} (1)	Forward Transconductance	V_{DS} = 15 V , I_D = 13 A		20		S
C_{iss} C_{oss} C_{rss}	Input Capacitance Output Capacitance Reverse Transfer Capacitance	V_{DS} = 25 V, f = 1 MHz, V_{GS} = 0		2900 900 40		pF pF pF
$C_{OSS\ eq}$ (3).	Equivalent Output Capacitance	V_{GS} = 0 V, V_{DS} = 0 to 400 V		300		pF
$t_{d(on)}$ t_r $t_{d(off)}$ t_f	Turn-on Delay Time Rise Time Turn-off-Delay Time Fall Time	V_{DD} = 300 V, I_D = 13 A, R_G = 4.7 Ω, V_{GS} = 10 V (see Figure 15)		35 22 14 20		ns ns ns ns
Q_g Q_{gs} Q_{gd}	Total Gate Charge Gate-Source Charge Gate-Drain Charge	V_{DD} = 480 V, I_D = 26 A, V_{GS} = 10 V (see Figure 18)		73 20 37	102	nC nC nC

Table 9: Source Drain Diode

Symbol	Parameter	Test Conditions	Min.	Typ.	Max.	Unit
I_{SD} I_{SDM} (2)	Source-drain Current Source-drain Current (pulsed)				26 104	A A
V_{SD} (1)	Forward On Voltage	I_{SD} = 26 A, V_{GS} = 0			1.5	V
t_{rr} Q_{rr} I_{RRM}	Reverse Recovery Time Reverse Recovery Charge Reverse Recovery Current	I_{SD} = 26 A, di/dt = 100 A/µs V_{DD} = 100V (see Figure 16)		450 7 30.5		ns µC A
t_{rr} Q_{rr} I_{RRM}	Reverse Recovery Time Reverse Recovery Charge Reverse Recovery Current	I_{SD} = 26 A, di/dt = 100 A/µs V_{DD} = 100V, T_j = 150°C (see Figure 16)		560 9 32.5		ns µC A

(1) Pulsed: Pulse duration = 300 µs, duty cycle 1.5 %.
(2) Pulse width limited by safe operating area.
(3) $C_{oss\ eq.}$ is defined as a constant equivalent capacitance giving the same charging time as C_{oss} when V_{DS} increases from 0 to 80% V_{DSS}.

Obsolete Product(s) - Obsolete Product(s)

Figure 3: Safe Operating Area

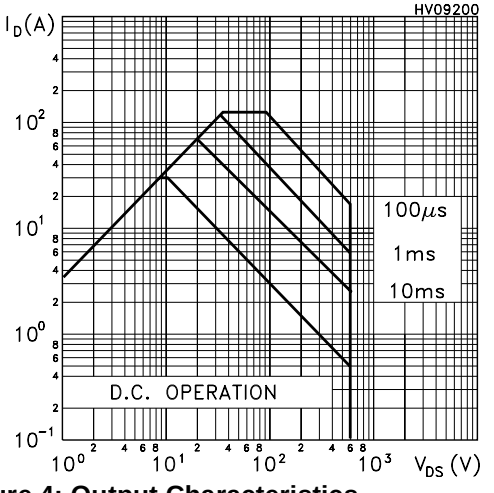

Figure 6: Thermal Impedance

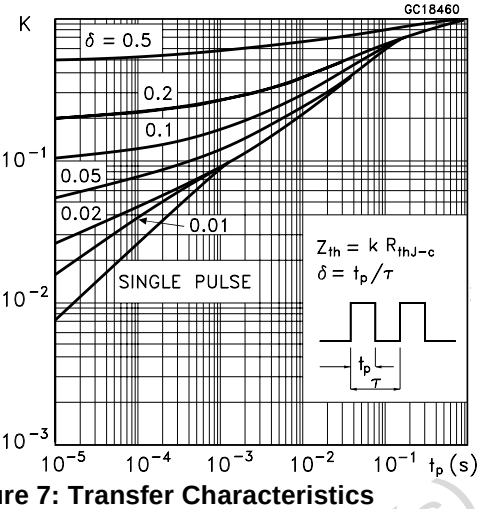

Figure 4: Output Characteristics

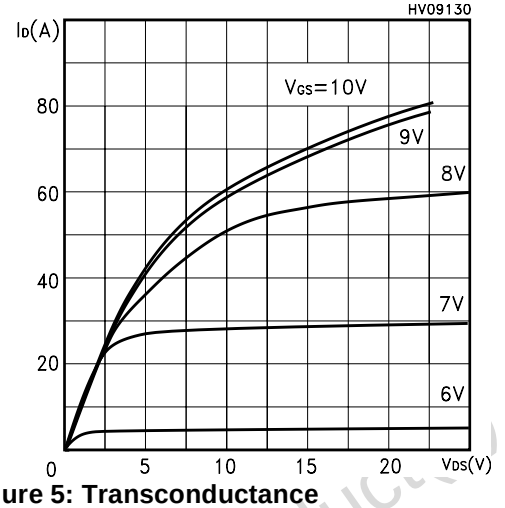

Figure 7: Transfer Characteristics

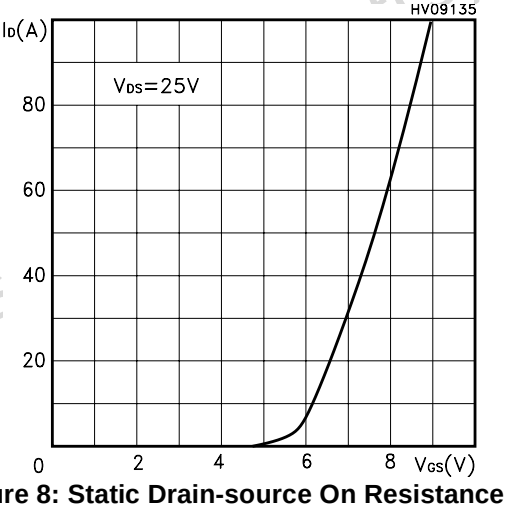

Figure 5: Transconductance

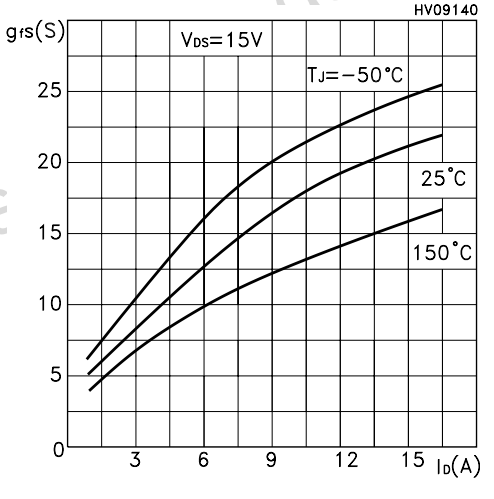

Figure 8: Static Drain-source On Resistance

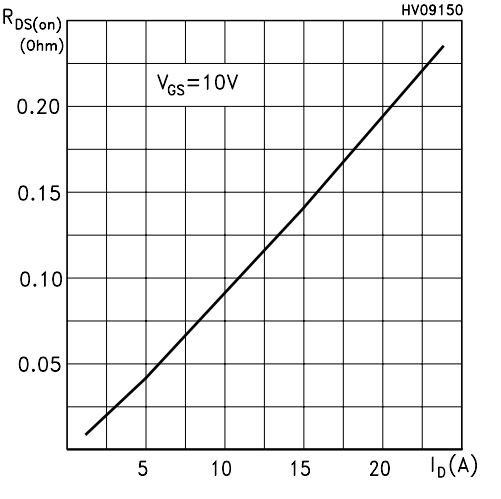

Figure 9: Gate Charge vs Gate-source Voltage

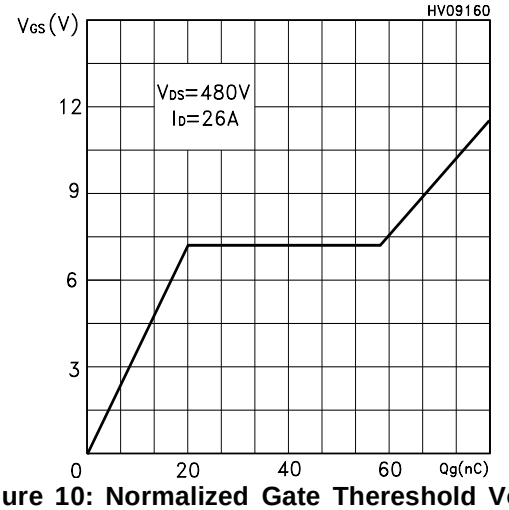

Figure 10: Normalized Gate Thereshold Voltage vs Temperature

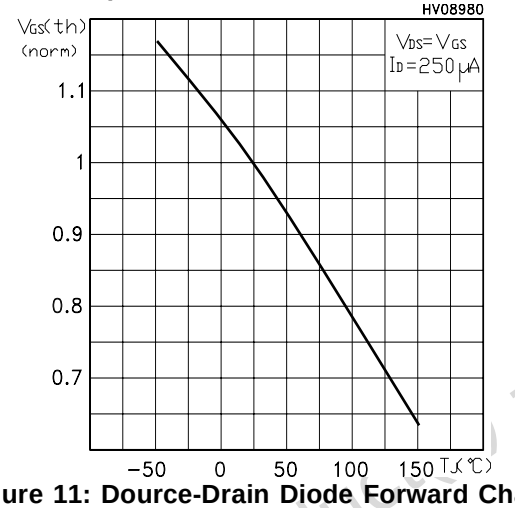

Figure 11: Dource-Drain Diode Forward Characteristics

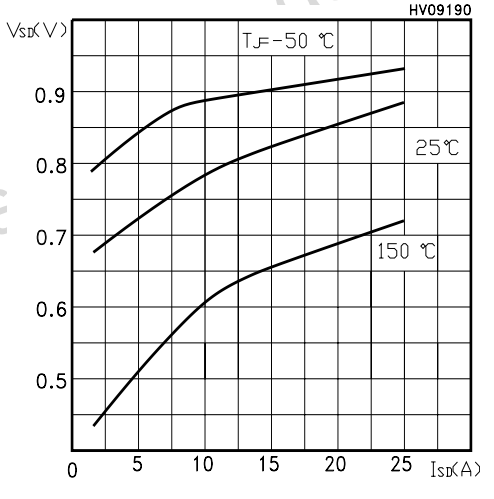

Figure 12: Capacitance Variations

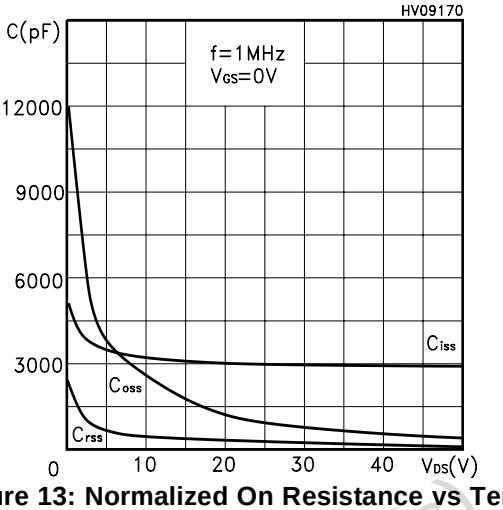

Figure 13: Normalized On Resistance vs Temperature

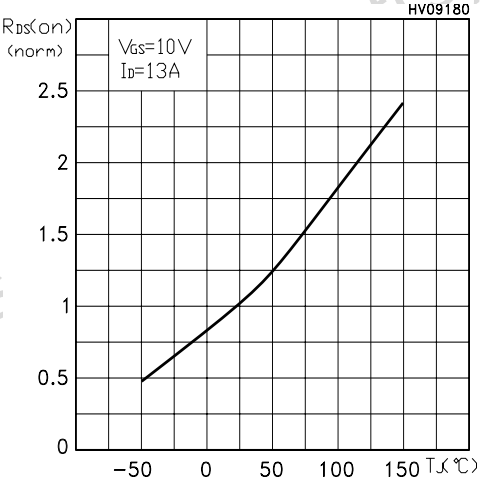

Figure 14: Unclamped Inductive Load Test Circuit

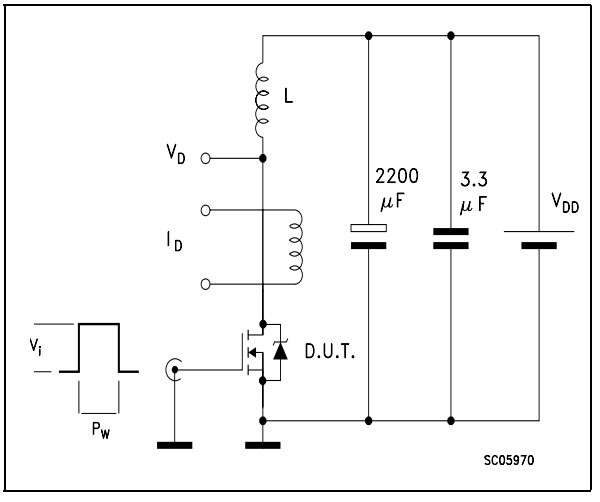

Figure 15: Switching Times Test Circuit For Resistive Load

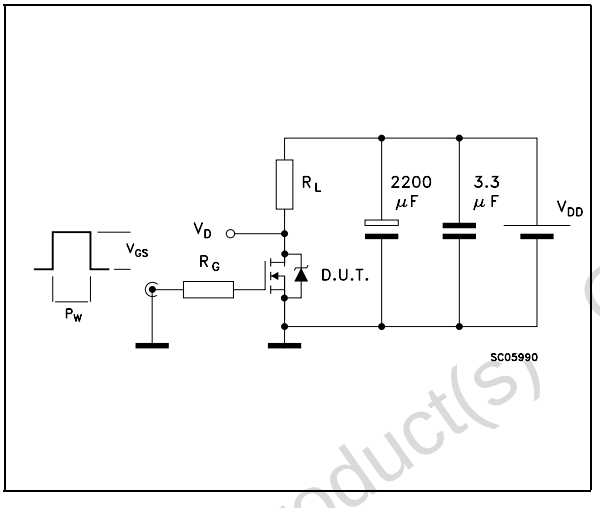

Figure 16: Test Circuit For Inductive Load Switching and Diode Recovery Times

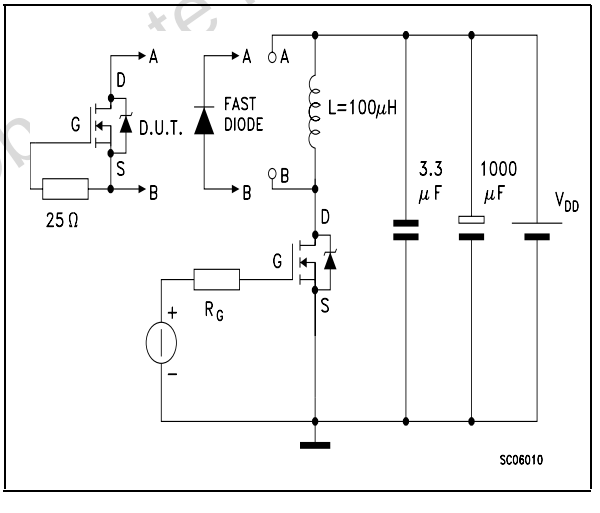

Figure 17: Unclamped Inductive Wafeform

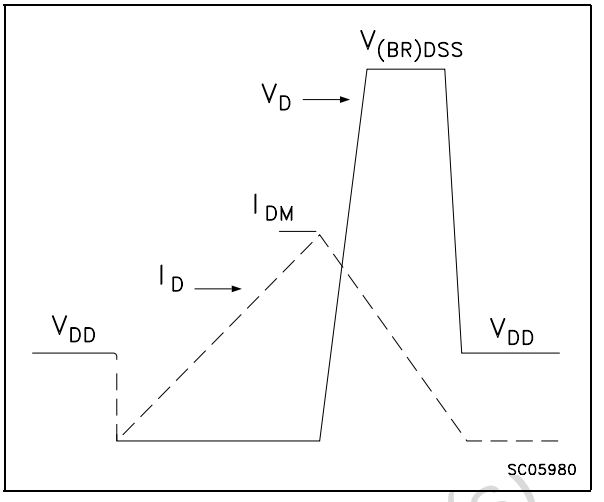

Figure 18: Gate Charge Test Circuit

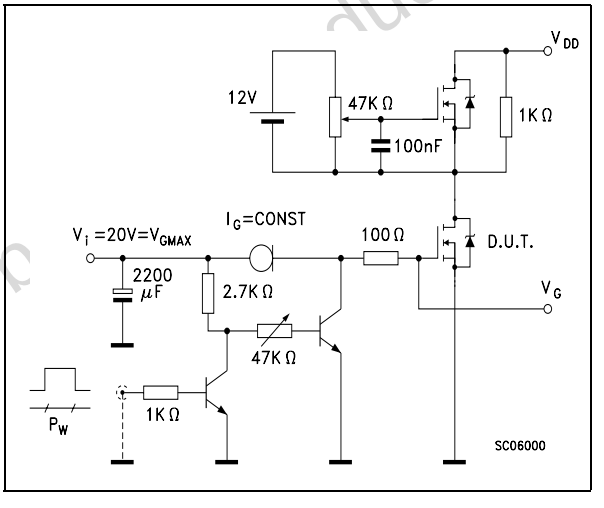

Obsolete Product(s)

TO-247 MECHANICAL DATA

DIM.	mm.			inch		
	MIN.	TYP	MAX.	MIN.	TYP.	MAX.
A	4.85		5.15	0.19		0.20
A1	2.20		2.60	0.086		0.102
b	1.0		1.40	0.039		0.055
b1	2.0		2.40	0.079		0.094
b2	3.0		3.40	0.118		0.134
c	0.40		0.80	0.015		0.03
D	19.85		20.15	0.781		0.793
E	15.45		15.75	0.608		0.620
e		5.45			0.214	
L	14.20		14.80	0.560		0.582
L1	3.70		4.30	0.14		0.17
L2		18.50			0.728	
øP	3.55		3.65	0.140		0.143
øR	4.50		5.50	0.177		0.216
S		5.50			0.216	

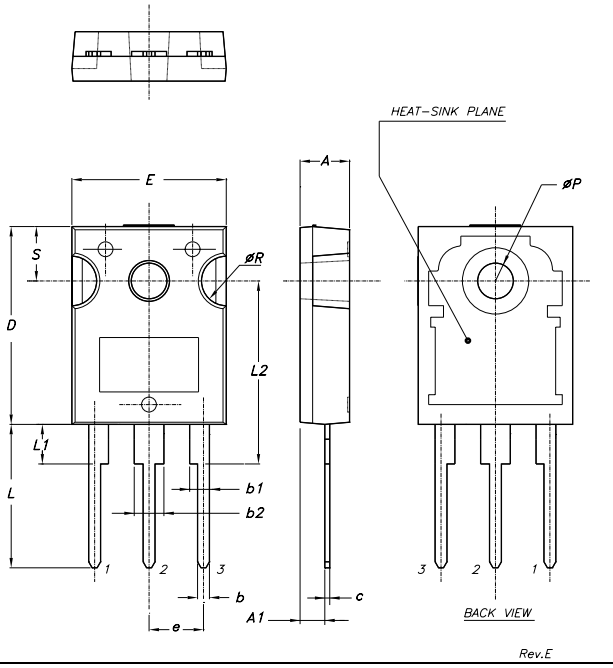

Table 10: Revision History

Date	Revision	Description of Changes
24-June-2004	4	New Stylesheet. No Content Change
04-Feb-2004	5	New Id current on title in first page

Obsolete Product(s) - Obsolete Product(s)

Information furnished is believed to be accurate and reliable. However, STMicroelectronics assumes no responsibility for the consequences of use of such information nor for any infringement of patents or other rights of third parties which may result from its use. No license is granted by implication or otherwise under any patent or patent rights of STMicroelectronics. Specifications mentioned in this publication are subject to change without notice. This publication supersedes and replaces all information previously supplied. STMicroelectronics products are not authorized for use as critical components in life support devices or systems without express written approval of STMicroelectronics.

The ST logo is a registered trademark of STMicroelectronics

All other names are the property of their respective owners

© 2005 STMicroelectronics - All Rights Reserved

STMicroelectronics group of companies

Australia - Belgium - Brazil - Canada - China - Czech Republic - Finland - France - Germany - Hong Kong - India - Israel - Italy - Japan - Malaysia - Malta - Morocco - Singapore - Spain - Sweden - Switzerland - United Kingdom - United States of America